Micro Technology Unlimited

# WORDPIC™

## WORD PROCESSING SYSTEM

## TUTORIAL MANUAL

280010

May 1983 Rev. A

## COPYRIGHT NOTICE

COPYRIGHT 1983, MICRO TECHNOLOGY UNLIMITED

This product is copyrighted. This includes the verbal description, programs and specifications. The customer may only make BACKUP copies of the software for his/her own use. The copyright notice must be added to and remain intact on all such backup copies. This product may not be reproduced for use with systems which are sold or rented.

Micro Technology Unlimited
2806 Hillsborough Street
P.O. Box 12106
Raleigh, NC 27605 USA
(919) 833-1458

## DISCLAIMER OF ALL WARRANTIES AND LIABILITY

No warranties, either express or implied, are made by Micro Technology Unlimited with respect to this manual or the software described herein, its quality, performance, merchantability, or fitness for any particular application. This product is sold "as is". The buyer assumes all risk as to quality and performance. Under no circumstances will MTU be liable for direct, indirect, incidental or consequential damages resulting from any defect in the software, even if MTU has been advised of the possibility of such damages. Should the software prove defective following purchase, the buyer assumes the entire cost of all necessary servicing, repair or correction and any incidental, indirect, or consequential damages. Additional rights vary from state so some of the above exclusions and limitations may not apply to you.

## NOTICE

Micro Technology Unlimited reserves the right to make changes to the product and specifications described in this manual at any time without notice.

TABLE OF CONTENTS


1. WORDPIC WORD PROCESSOR - - - - - - - - - - - - - - - - - - - - - - - - - - - - - - 1
   1.1 Introduction - - - - - - - - - - - - - - - - - - - - - - - - - - - - - - - - - 1
   1.2 What is a Word Processor - - - - - - - - - - - - - - - - - - - - - - - - - - 1
   1.3 Technical Features - - - - - - - - - - - - - - - - - - - - - - - - - - - - - 1
   1.4 How to Use This Manual - - - - - - - - - - - - - - - - - - - - - - - - - - - 2

2. FIRST TIME OPERATION - - - - - - - - - - - - - - - - - - - - - - - - - - - - - - 3
   2.1 Meet the MTU-130 Computer - - - - - - - - - - - - - - - - - - - - - - - - - 3
   2.2 Hardware and Software - - - - - - - - - - - - - - - - - - - - - - - - - - - 4
   2.3 Floppy Disks - - - - - - - - - - - - - - - - - - - - - - - - - - - - - - - - 4
   2.4 Startup Procedure - - - - - - - - - - - - - - - - - - - - - - - - - - - - - 5
   2.5 Backing Up the Distribution Diskette - - - - - - - - - - - - - - - - - - - 7

3. CREATING YOUR FIRST DOCUMENT - - - - - - - - - - - - - - - - - - - - - - - - - - 8
   3.1 File Names - - - - - - - - - - - - - - - - - - - - - - - - - - - - - - - - - 8
   3.2 Editor Display - - - - - - - - - - - - - - - - - - - - - - - - - - - - - - - 9
   3.3 Entering Text - - - - - - - - - - - - - - - - - - - - - - - - - - - - - - - 9
   3.4 Correcting Errors with RUBOUT and BACKSPACE - - - - - - - - - - - - - - - 9
   3.5 Moving Left or Right with the Arrow Keys - - - - - - - - - - - - - - - - 9
   3.6 Auto Repeat - - - - - - - - - - - - - - - - - - - - - - - - - - - - - - - 10
   3.7 Moving Up and Down with the Arrow Keys - - - - - - - - - - - - - - - - - 10
   3.8 Jumping to the Beginning or End of the Line - - - - - - - - - - - - - - 10
   3.9 Inserting and Deleting Characters - - - - - - - - - - - - - - - - - - - 10
   3.10 Starting a New Line - - - - - - - - - - - - - - - - - - - - - - - - - - 11
   3.11 Display Window Scrolling - - - - - - - - - - - - - - - - - - - - - - - 11
   3.12 Inserting and Deleting Whole Lines - - - - - - - - - - - - - - - - - - 11
   3.13 Justifying Paragraphs with JUSTPARA - - - - - - - - - - - - - - - - - 12
   3.14 Paragraph Limits - - - - - - - - - - - - - - - - - - - - - - - - - - - 13
   3.15 Returning to the Index Display - - - - - - - - - - - - - - - - - - - - 13

4. PRINTING YOUR FIRST DOCUMENT - - - - - - - - - - - - - - - - - - - - - - - - - 14
   4.1 Printer Dependencies - - - - - - - - - - - - - - - - - - - - - - - - - - 14
   4.2 The PRINT Module - - - - - - - - - - - - - - - - - - - - - - - - - - - - 14

5. BASIC DOCUMENT FORMATTING - - - - - - - - - - - - - - - - - - - - - - - - - - - 16
   5.1 Document Formatting Code Lines - - - - - - - - - - - - - - - - - - - - - 16
   5.2 Recalling your First Document - - - - - - - - - - - - - - - - - - - - - 16
   5.3 Paragraph Code Line - - - - - - - - - - - - - - - - - - - - - - - - - - 16
   5.4 Inserting a Paragraph Code Line at the Beginning of a File - - - - - - 17
   5.5 More About Code Line Commands - - - - - - - - - - - - - - - - - - - - - 18
   5.6 OFFSET Command - - - - - - - - - - - - - - - - - - - - - - - - - - - - - 19
   5.7 LEFT Command - - - - - - - - - - - - - - - - - - - - - - - - - - - - - - 19
   5.8 RIGHT Command - - - - - - - - - - - - - - - - - - - - - - - - - - - - - 19
   5.9 Effects of Left and Right Margins on the Display - - - - - - - - - - - 20
   5.10 TYPE Command - - - - - - - - - - - - - - - - - - - - - - - - - - - - - 20
   5.11 JUSTIFY Command - - - - - - - - - - - - - - - - - - - - - - - - - - - 21
   5.12 Reprinting your First Document - - - - - - - - - - - - - - - - - - - - 22

6. MORE ON EDITING - - - - - - - - - - - - - - - - - - - - - - - - - - - - - - - - 23
   6.1 The SAMPLE1 File - - - - - - - - - - - - - - - - - - - - - - - - - - - - 23
   6.2 The Status Line - - - - - - - - - - - - - - - - - - - - - - - - - - - - 24
   6.3 Shift/UP and Shift/DOWN - - - - - - - - - - - - - - - - - - - - - - - - 24
   6.4 HOME and Shift/HOME - - - - - - - - - - - - - - - - - - - - - - - - - - 24
   6.5 FIND Function Key - - - - - - - - - - - - - - - - - - - - - - - - - - - 24
   6.6 Finding a Text String - - - - - - - - - - - - - - - - - - - - - - - - - 25
   6.7 Qualified Searches with FIND - - - - - - - - - - - - - - - - - - - - - 26
   6.8 Combined Searches - - - - - - - - - - - - - - - - - - - - - - - - - - - 27
   6.9 CTRL/B and CTRL/X - - - - - - - - - - - - - - - - - - - - - - - - - - - 27

6.10 CHANGE Function Key - - - - - - - - - - - - - - - - - - - - - - - - - - - - - 28
6.11 Multiple Changes - - - - - - - - - - - - - - - - - - - - - - - - - - - - - - 29
6.12 TABSTOP Function Key - - - - - - - - - - - - - - - - - - - - - - - - - - - - 30
6.13 CENTER Function Key - - - - - - - - - - - - - - - - - - - - - - - - - - - - 31
6.14 Embedded Code Characters - - - - - - - - - - - - - - - - - - - - - - - - - - 31
6.15 Underlining, Bold, and Wide Print Embedded Codes - - - - - - - - - - - - - 32
6.16 Printer Pause Embedded Code - - - - - - - - - - - - - - - - - - - - - - - - 32
6.17 Subscripts and Superscripts - - - - - - - - - - - - - - - - - - - - - - - - 32
6.18 BACKSPACE Embedded Code - - - - - - - - - - - - - - - - - - - - - - - - - - 33
6.19 Block Operations using Mark - - - - - - - - - - - - - - - - - - - - - - - - 33
6.20 Block Delete - - - - - - - - - - - - - - - - - - - - - - - - - - - - - - - - 33
6.21 Recovering Deletions with RECALL - - - - - - - - - - - - - - - - - - - - - - 34
6.22 More on Line Marking - - - - - - - - - - - - - - - - - - - - - - - - - - - - 35
6.23 Paragraph Marking - - - - - - - - - - - - - - - - - - - - - - - - - - - - - 35
6.24 Page Marking - - - - - - - - - - - - - - - - - - - - - - - - - - - - - - - - 35
6.25 CANCEL Function Key - - - - - - - - - - - - - - - - - - - - - - - - - - - - 35
6.26 FIND Function Key - - - - - - - - - - - - - - - - - - - - - - - - - - - - - 35
6.27 SPLIT Function Key - - - - - - - - - - - - - - - - - - - - - - - - - - - - - 36
6.28 Block Copy - - - - - - - - - - - - - - - - - - - - - - - - - - - - - - - - - 37
6.29 Block Move - - - - - - - - - - - - - - - - - - - - - - - - - - - - - - - - - 37
6.30 Block Save - - - - - - - - - - - - - - - - - - - - - - - - - - - - - - - - - 37
6.31 MARKMORE Function Key - - - - - - - - - - - - - - - - - - - - - - - - - - - 38
6.32 UPDATE Function Key - - - - - - - - - - - - - - - - - - - - - - - - - - - - 38
6.33 NEWPAGE Function Key - - - - - - - - - - - - - - - - - - - - - - - - - - - 39

7. PAGINATING A DOCUMENT - - - - - - - - - - - - - - - - - - - - - - - - - - - - 40
7.1 The PAGINATE Module - - - - - - - - - - - - - - - - - - - - - - - - - - - - 40
7.2 Startup Dialog - - - - - - - - - - - - - - - - - - - - - - - - - - - - - - - 40
7.3 PAGINATE Display - - - - - - - - - - - - - - - - - - - - - - - - - - - - - - 41
7.4 PAGINATE Status Line - - - - - - - - - - - - - - - - - - - - - - - - - - - - 41
7.5 ACCEPT and REJECT Function Keys - - - - - - - - - - - - - - - - - - - - - - 42
7.6 BACK PG. Function Key - - - - - - - - - - - - - - - - - - - - - - - - - - - 44
7.7 Exiting from PAGINATE - - - - - - - - - - - - - - - - - - - - - - - - - - - 44

8. ADVANCED FEATURES - - - - - - - - - - - - - - - - - - - - - - - - - - - - - - 45
8.1 Headers and Footers - - - - - - - - - - - - - - - - - - - - - - - - - - - - 45
8.2 Setting the Page Number- - - - - - - - - - - - - - - - - - - - - - - - - - - 47
8.3 Variables - - - - - - - - - - - - - - - - - - - - - - - - - - - - - - - - - 47
8.4 Displaying the Variable Names - - - - - - - - - - - - - - - - - - - - - - - 48
8.5 Displaying Templates - - - - - - - - - - - - - - - - - - - - - - - - - - - - 49
8.6 Default Conditions for Headers and Footers - - - - - - - - - - - - - - - - - 49
8.7 Odd and Even Pages - - - - - - - - - - - - - - - - - - - - - - - - - - - - - 49
8.8 PAGELENGTH Command - - - - - - - - - - - - - - - - - - - - - - - - - - - - 50
8.9 LINES Command - - - - - - - - - - - - - - - - - - - - - - - - - - - - - - - 50
8.10 SPACING Command - - - - - - - - - - - - - - - - - - - - - - - - - - - - - - 50
8.11 PSPACING Command - - - - - - - - - - - - - - - - - - - - - - - - - - - - - 51
8.12 LPI Command - - - - - - - - - - - - - - - - - - - - - - - - - - - - - - - - 51
8.13 INDENT Command - - - - - - - - - - - - - - - - - - - - - - - - - - - - - - 51
8.14 REVINDENT Command - - - - - - - - - - - - - - - - - - - - - - - - - - - - 51
8.15 Proportional Printing Considerations - - - - - - - - - - - - - - - - - - - 52
8.16 PROPPITCH Command - - - - - - - - - - - - - - - - - - - - - - - - - - - - 52
8.17 Special Characters - - - - - - - - - - - - - - - - - - - - - - - - - - - - 54
8.18 Printing Mathematical Formulas - - - - - - - - - - - - - - - - - - - - - - 54

9. FIGURES - - - - - - - - - - - - - - - - - - - - - - - - - - - - - - - - - - - - - - - - - - - - 56
9.1 Graphic Files - - - - - - - - - - - - - - - - - - - - - - - - - - - - - - - - - - - - - - - - 57
9.2 Figure Code Lines - - - - - - - - - - - - - - - - - - - - - - - - - - - - - - - - - - - - - - 57
9.3 FILE Command - - - - - - - - - - - - - - - - - - - - - - - - - - - - - - - - - - - - - - - - 57
9.4 REM Command - - - - - - - - - - - - - - - - - - - - - - - - - - - - - - - - - - - - - - - - 58
9.5 HEIGHT Command - - - - - - - - - - - - - - - - - - - - - - - - - - - - - - - - - - - - - - 58
9.6 WIDTH Command - - - - - - - - - - - - - - - - - - - - - - - - - - - - - - - - - - - - - - 58
9.7 DENSITY Command - - - - - - - - - - - - - - - - - - - - - - - - - - - - - - - - - - - - - 59
9.8 Where Do Figures Come From? - - - - - - - - - - - - - - - - - - - - - - - - - - - - - - - 59
9.9 GSAVE Utility Program - - - - - - - - - - - - - - - - - - - - - - - - - - - - - - - - - - 60
9.10 GGET Utility Program - - - - - - - - - - - - - - - - - - - - - - - - - - - - - - - - - - 61
9.11 GETDIM Utility Program - - - - - - - - - - - - - - - - - - - - - - - - - - - - - - - - - 61
9.12 GCONVERT Utility Program - - - - - - - - - - - - - - - - - - - - - - - - - - - - - - - - 61

10. MORE ADVANCED FEATURES - - - - - - - - - - - - - - - - - - - - - - - - - - - - - - - - - - 63
10.1 Wide Mode Documents - - - - - - - - - - - - - - - - - - - - - - - - - - - - - - - - - - 63
10.2 Two Column Text - - - - - - - - - - - - - - - - - - - - - - - - - - - - - - - - - - - - 64
10.3 BACKPAGE Command - - - - - - - - - - - - - - - - - - - - - - - - - - - - - - - - - - - 64
10.4 BACKUP Command - - - - - - - - - - - - - - - - - - - - - - - - - - - - - - - - - - - - 65
10.5 Macros - - - - - - - - - - - - - - - - - - - - - - - - - - - - - - - - - - - - - - - - - 65

11. FILE MAINTENANCE OPERATIONS - - - - - - - - - - - - - - - - - - - - - - - - - - - - - - - 67
11.1 Selecting a Disk Drive - - - - - - - - - - - - - - - - - - - - - - - - - - - - - - - - 67
11.2 Changing Disks in Drive 0 - - - - - - - - - - - - - - - - - - - - - - - - - - - - - - 67
11.3 Formatting a New Disk - - - - - - - - - - - - - - - - - - - - - - - - - - - - - - - - 68
11.4 Copying a File - - - - - - - - - - - - - - - - - - - - - - - - - - - - - - - - - - - - 69
11.5 Deleting a File - - - - - - - - - - - - - - - - - - - - - - - - - - - - - - - - - - - - 69
11.6 Backing Up an Entire Disk - - - - - - - - - - - - - - - - - - - - - - - - - - - - - - 70
11.7 Renaming a File - - - - - - - - - - - - - - - - - - - - - - - - - - - - - - - - - - - - 70
11.8 File Attributes - - - - - - - - - - - - - - - - - - - - - - - - - - - - - - - - - - - - 70

12. BEYOND THIS MANUAL - - - - - - - - - - - - - - - - - - - - - - - - - - - - - - - - - - - - 71
12.1 Communicating with Other Software and Computers - - - - - - - - - - - - - - - - 71

GLOSSARY - - - - - - - - - - - - - - - - - - - - - - - - - - - - - - - - - - - - - - - - - - - 72

# WORDPIC WORD PROCESSOR

## TUTORIAL MANUAL

## CHAPTER 1

### 1.1 INTRODUCTION

WORDPIC is a powerful, easy-to-use word processor for the MTU-130 computer. The name WORDPIC is a contraction of "WORDs and PICtures", which hints at the main difference between WORDPIC and other word processors -- its ability to process graphical information mixed with text. Despite the fact that WORDPIC is one of the most sophisticated word processors on the market, it is easy to use. This manual provides step-by-step instructions which will guide you through every aspect of WORDPIC usage, from how to turn on the machine to advanced operations. Even if you have never used a word processor or a computer before, you will be able to generate and print useful documents from your very first session. Soon you will wonder how you ever got along without this electronic servant!

### 1.2 WHAT IS A WORD PROCESSOR?

The WORDPIC word processor is a computer program which you use to create, store, modify and print documents such as letters, memos, reports, manuals, or even full sized books. It is vastly superior to an ordinary typewriter because all text entered can be recalled and changed at will. The word processor can print documents flawlessly in a variety of formats. Changes that would require hours or days with a typewriter can be made in seconds or minutes using WORDPIC. You do not have to learn any computer programming language or have any technical background to use WORDPIC. The word processor displays the text on the video display, and you make changes by pressing function keys on the keyboard. After you have read this manual and tried the examples, you will find the system nearly self-explanatory, with almost nothing to memorize.

### 1.3 TECHNICAL FEATURES

Listed below are some of the technical features of the WORDPIC system. If you are unfamiliar with some of the terms used, do not be concerned. They will be explained in this manual.

1. Full screen CRT editor.
2. 80 column display width with ability to edit lines up to 160 characters long.
3. "Infinite scroll", bidirectional operation on documents of up to 1,000,000 characters.
4. Full upper and lower case ASCII character set displayed, plus special characters.
5. Interrupt-driven keyboard permits type-ahead.
6. Separate 5 key "cursor-cross" group with auto-repeat; diagonal movements.
7. Eight separate function keys with displayed legends.
8. Convenient INSERT and DELETE keys on main keyboard.
9. Automatic "word wrap" at end of line, even during insertions.
10. JUSTPARA function key for on-screen paragraph justification.
11. Automatic left and right margins, variable within the document.
12. Automatic tabstops, variable within the document.

13. CENTER function key centers lines.
14. Global and local search for character string or line, including multiple operations.
15. Global and local search and replace with optional qualifications by column and line limits and case sensitivity, including multiple operations and user veto.
16. Multi-line block MOVE, COPY, DELETE, and SAVE/RECALL.
17. RECALL function key for recovery of an accidental deletion.
18. Cut-and-paste operations with multiple files are supported.
19. Printer control provided for underline, subscripts, superscripts, bold print, wide print, and printer pause.
20. Support for Greek, math, and special symbols provided by the printer, displayed on the screen.
21. Printer control provided for selection of pica, elite, proportional and compressed type styles, variable within the document.
22. Ragged, flush, and true proportional justification, variable within the document.
23. Printing of graphic images of varying sizes and densities, mixed with text, including text-beside-graphics and text-over-graphics.
24. Supports multi-column printing.
25. Selectable paper size, variable within the document.
26. Selectable margin "gutterspace", variable within the document; can be different for odd and even numbered pages (for bound documents).
27. Automatic line spacing, variable within the document.
28. Automatic indentation of paragraphs, variable within the document, including reverse-indentation (for outlines, etc.).
29. Automatic intelligent pagination (with user override) of documents.
30. Automatic page numbering including provision for compound numbering (e.g., page 3-14), positioned anywhere on the printed page.
31. Automatic headers and footers for chapter or section titles, etc; includes capability of printing graphics image of company logo.
32. Alphabetized display of documents, including graphic images.
33. Automatic backup of documents.
34. Function keys for copying, renaming, and deleting documents.
35. Eight macros for frequently-needed phrases or combined editing commands.

## HOW TO USE THIS MANUAL

This manual is intended to introduce the WORDPIC system by "walking through" a series of examples. If possible, a "hands-on" approach should be used, where you actually work with the WORDPIC system as it is described. In case you don't have access to a WORDPIC system, enough "screen pictures" are provided so that you can still follow along.

A Glossary is provided to help you with any unfamiliar terms. A comprehensive reference manual with an index is provided separately, which should be able to answer any specific questions about the WORDPIC system. In addition, the MTU-130 Users Manual explains many of the other applications of the MTU-130 computer besides word processing, and provides technical information on the system.

CHAPTER 2

# FIRST TIME OPERATION

## 2.1 MEET THE MTU-130 COMPUTER

Figure 2.1 below illustrates the important components of the MTU-130 computer system. Familiarize yourself with the various components of the system and the location of the important keys shown on the keyboard. If you have just received your MTU-130 and it is not yet set up, refer to the MTU-130 User Manual Chapter 1 before proceeding.

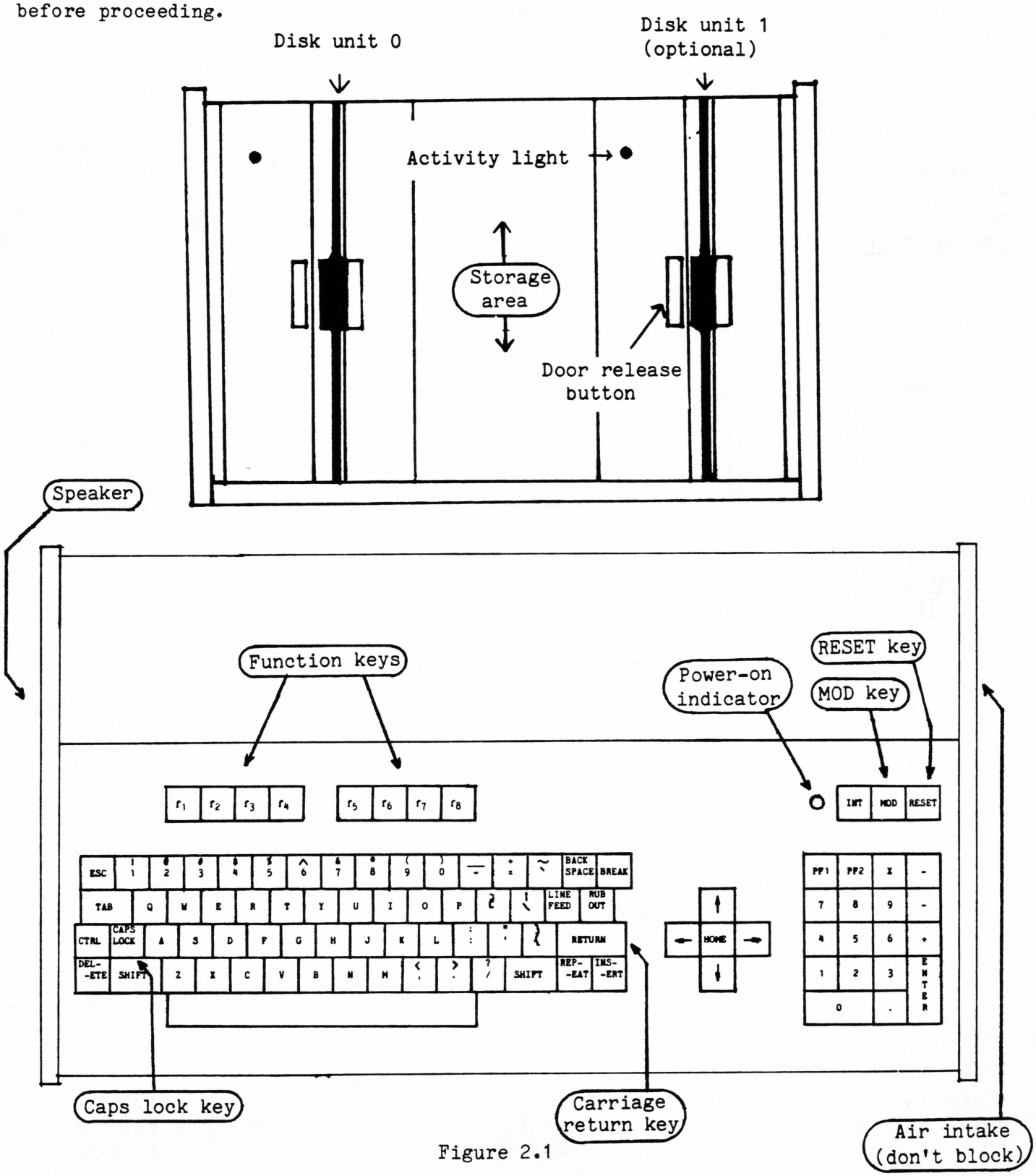


Figure 2.1

## 2.2 HARDWARE AND SOFTWARE

The sketches on the preceeding page show the major hardware components of the MTU-130 system, which is a powerful, general purpose computer. In order to use the MTU-130 for word processing, you will need to load the WORDPIC software (program) into the computer's memory. This is very easy.

The WORDPIC software is provided on a single flexible diskette (also called a floppy disk). The floppy disk included with this manual is called the distribution diskette, which is pre-recorded at the MTU factory with the WORDPIC software. The distribution diskette can be easily identified by the printed label.

## 2.3 FLOPPY DISKS

Besides the distribution diskette, you will need one or more blank diskettes to store your documents on. These are called working disks. Blank disks can be purchased at any computer supply store and most office supply stores, or from MTU, usually in boxes of 10 disks.* Be sure to ask for 8 inch, double-sided, double-density soft-sectored disks when ordering.*

The figure below identifies the important parts of a floppy disk:

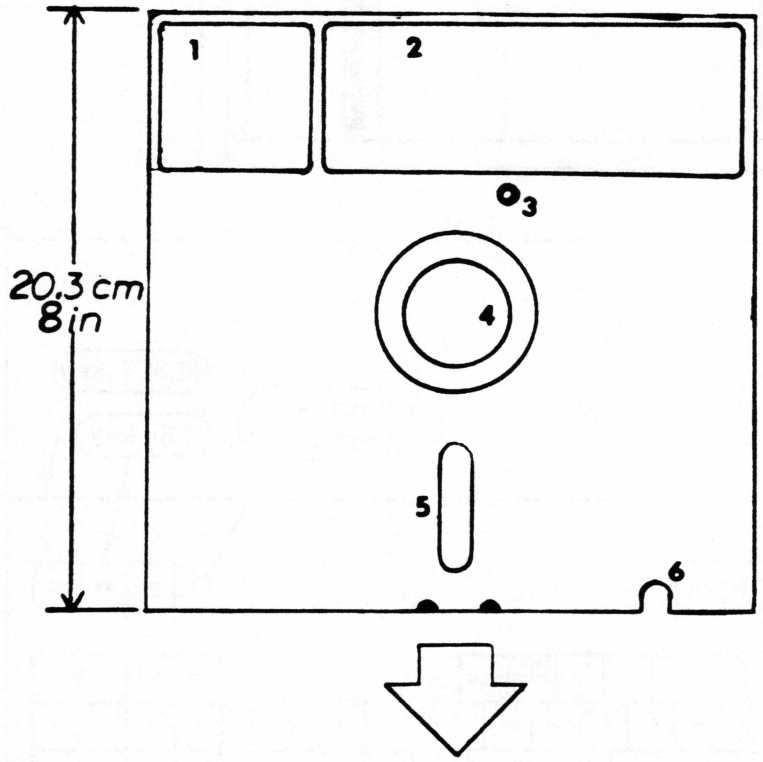


1. MANUFACTURER'S LABEL
2. USER APPLIED LABEL
3. INDEX HOLE
4. DRIVE SPINDLE HOLE
5. READ/WRITE HEAD ACCESS HOLE
6. WRITE-PROTECT NOTCH

Figure 2.2

*Note: Owners of MTU-130-1D systems (only one disk drive) may buy preformatted WORDPIC diskettes from MTU. This avoids the tedious procedure otherwise required to make additional working disks on single drive systems. Contact MTU for details.

The floppy disks used in the MTU-130 computer are capable of storing up to 1,000,000 characters (bytes) each. You should always observe the following rules when handling floppy disks:

1. Don't touch any of the exposed recording surfaces of the disk.

2. Store the diskette in its protective envelope when not in use.

3. Avoid exposure to extreme heat, cold, or magnetic fields.

4. Do not write on the disk directly with a ball-pen or pencil. Write on the adhesive labels provided before applying them to the disk. Soft felt-tip pens may be used if light pressure is applied.

5. Don't bend the disk.

## 2.4 STARTUP PROCEDURE

To start the WORDPIC system, insert the WORDPIC Distribution diskette into drive 0 as shown below. Push the disk in until a slight "click" is heard and the disk does not spring back out, then close the drive door until it latches. To remove a disk, press the door latch button in.

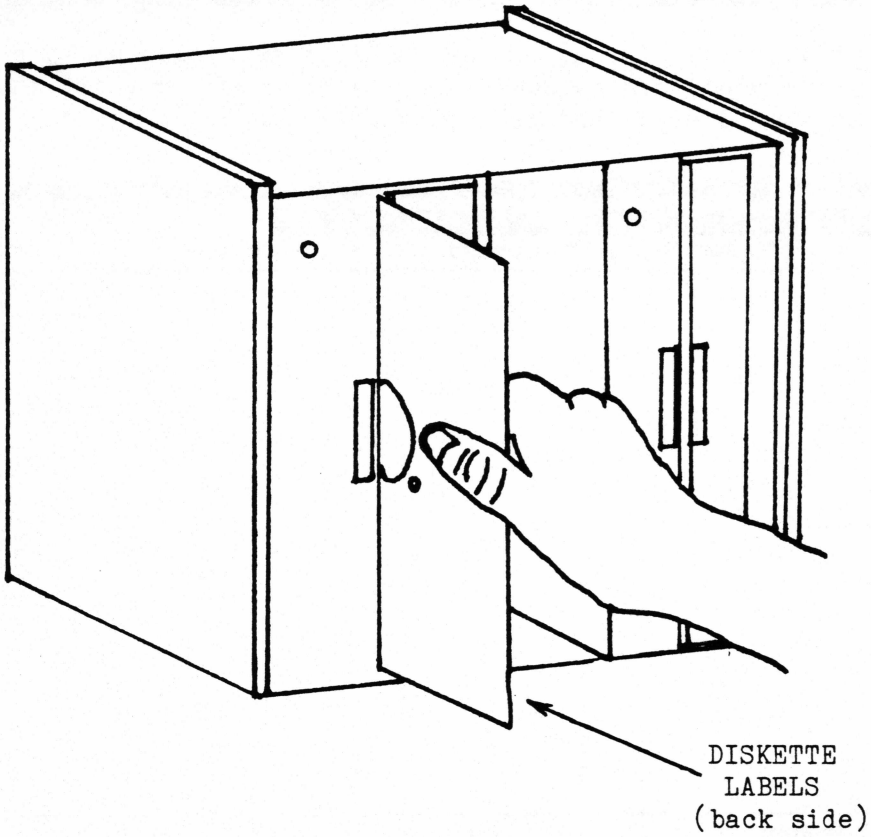

Next turn on the computer system using the rocker switch on the right rear of the computer. If the computer is already on, turn it off for at least two seconds and then back on. The disk drive should "click" and blink the activity light on the disk drive for about 4 seconds. Then the following "signon" message should appear on the display:

```
                    MTU WORDPIC tm   WORD PROCESSING SYSTEM

                    (C) Copyright 1983, M.T.U.

                 Printer support is for the NEC-8023 printer.


WORDPIC Shell program will start automatically once the date is entered.

CODOS 2.0   (C) 1981 MTU
PLEASE ENTER DATE (EXAMPLE:04-JUL-76)?=
```

Type in the date in any form you wish, up to 9 characters, followed by a carriage RETURN. The recommended form is 26-MAY-83. After another short flurry of disk activity, the screen should erase and redisplay as follows:

```
                 WORDPIC Shell 1.0    Copyright 1983 M.T.U.
Please select a file with cursor keys, then press a function key.
 SAMPLE1
 SAMPLE1_FIG.G
 TEMPLATES

   2 Text files,   1 Graphic files.    29% space left on disk in drive 0.
 EDIT | NEWFILE | PRINT |  | PAGINATE | COPY | FILE ATT | OTHER
```

You have now successfully started the WORDPIC system!

The display above is called the WORDPIC INDEX display, also sometimes called the "shell". This INDEX display shows the names of all the word processing documents on the disk, in alphabetical order. Initially, there are only a couple of documents on the disk, which are sample documents you will work with later. The first document name is highlighted in "reverse video", which indicates it is the current document of interest. Below the list of files is a status line indicating the number of documents or files present, and the amount of disk space left. The amount of disk space left on the distribution disk is much smaller than on a normal WORDPIC disk because there are several huge system source files included on the disk (which are not displayed on the index).

The eight boxes at the bottom of the screen are called the function key legends. Each of these legends is associated with a corresponding function key at the top of the keyboard. The box labelled EDIT tells what function will be performed if you press the f1 function key; the NEWFILE legend is associated with function key f2, etc. The rightmost function key (f8) has the OTHER legend. These function key legends will change automatically as needed, so that the eight function keys can perform more than eight functions. The first job you will use the function keys for is to generate a backup disk.

## 2.5 BACKING UP THE DISTRIBUTION DISKETTE

Before creating your first document, you should backup the distribution disk. "Backing up" a disk means duplicating the contents on another disk. To do this, first cover the write protect notch (shown in figure 2.2) on one of your new blank disks with one of the opaque tapes provided with the disks. If your disks don't have a write-protect notch, that is all right. Information can only be written (recorded) on the disk if the notch is covered or missing. The distribution disk's notch should not be covered, since you won't be writing on it. Insert the blank disk into drive 1 and close the door.

Press the OTHER function key (f8) and the function key legends will change. Now press the BACKUP function key (f6). The function key legends will disappear and some brief instructions will be displayed. Press RETURN to begin the copying process. Copying will take about 2.5 minutes, after which the CRT (monitor) will display the following message:

Backup Successful.
Return desired word processing disk to drive 0, if not already there.
Press RETURN when ready.

Since you will want to use your new (copied) disk as your working disk, remove the Distribution disk from drive 0 (by pressing the door latch button), return it to its protective envelope, and put it away for safekeeping. Then remove the working disk from drive 1 and put it in drive 0. Now press RETURN. The INDEX display should be shown exactly as before.

You have now backed up the Distribution disk and made your first working disk. Use this working disk for the exercises in this manual. Note that you should only remove or change disks when prompted to do so on the CRT. In the next chapter you will learn how to create a new document on a disk. Chapter 4 explains how to print a document.

# CHAPTER 3

## CREATING YOUR FIRST DOCUMENT

A document is saved on the WORDPIC disk as a file. To create a new document, press the NEWFILE function key (f2). It doesn't matter which file name is highlighted in the index display at the time. When NEWFILE is pressed, the highlighting disappears from the display, and a prompting message appears at the top of the screen:

NEWFILE =
Please enter a file name for the new file you wish to create.

A blinking rectangle will appear after the = character. This blinking rectangle is called the cursor. The cursor indicates that WORDPIC is ready to accept information from the keyboard. As you type in a file name, the characters will be displayed at the top of the screen, and the cursor will advance. The cursor always indicates the location where the next character will be displayed.

### 3.1 FILE NAMES

File names may have from two to twelve characters. The first character must be alphabetic. All other characters must be alphabetic, numeric, or the underline character (_), with no blanks. When creating your own documents, you should give file names that are descriptive and meaningful to you. For now, type in the following file name, followed by the carriage RETURN key:

TESTDOC

The name will appear in all upper-case letters, whether you type in upper or lower case. WORDPIC will ask you if you want the new file to be NORMAL or WIDE. Press the NORMAL (f1) function key. Wide documents will be discussed later.

After a moment of disk activity, the screen will clear and redisplay:

```
              WORDPIC Editor  1.0   (C) Copyright 1983 M.T.U.
File= TESTDOC:0                                Col=  1  Line=    1  Top=    1

JUSTPARA | FIND | MARK | CHANGE | TABSTOP | PRTRCODE | CENTER | OTHER
```

## 3.2 EDITOR DISPLAY

This display is called the EDITOR main display, and is divided into three parts. The top three lines form the command/status area. It displays the WORDPIC EDITOR title, copyright, and status information. The middle 20 lines of the display is called the text window, and is used to display the text of your document. The bottom of the screen shows eight new function keys which are used for editing text. The function keys and status line will be described in detail later.

## 3.3 ENTERING TEXT

The cursor is blinking in column 1 of the text window, indicating that WORDPIC is ready for you to type your document. Check to see that the CAPS LOCK key is not down. If the CAPS LOCK key is down, press it to let it up so that you can enter lower case letters. Then type in the sentence below, just as you would on a typewriter. It is not necessary to press carriage RETURN at the end of a line; just keep typing and watch carefully what happens as you type the word "processor".

This is my sample text which I am entering into my first document on the word processor.

If you watched closely, you noticed that as you reached the end of the line after the first two letters of the word "processor", the whole word jumped down to the start of the second line. This feature is called word wrap. Word wrap means that a word which will not completely fit at the end of a line will not be split between two lines, but will be moved to the next line in its entirety.

## 3.4 CORRECTING ERRORS WITH RUBOUT AND BACKSPACE

Unlike a typewriter, it is very easy to correct errors using WORDPIC. If you type a wrong key and discover it immediately, you can use the RUBOUT key to fix it. Pressing the RUBOUT key backs up the cursor one character, erases the character, and leaves the cursor in that position. You may then type the correct key and continue typing. Experiment with RUBOUT on the word "processor".

If you need to correct a character which is several characters back without erasing the intervening text, you may use BACKSPACE to position the cursor to the desired character and then type the correction. Overtyping text simply replaces the old characters with the new characters you type.

## 3.5 MOVING LEFT OR RIGHT WITH THE ARROW KEYS

To move the cursor back to the right, press the right-pointing arrow key (hereafter simply called RIGHT), located in the five-key cursor cross. If you try to use the spacebar to move right, it will replace characters with blanks as the cursor moves. Notice that if you hold down the RIGHT key, it repeats automatically after a slight delay, making it easy to move larger distances. Try the LEFT (left arrow) key. It is almost the same as BACKSPACE. The only difference is that BACKSPACE won't backup beyond column 1, while pressing LEFT in column 1 "wraps" the cursor to the last column of the same line.

## 3.6 AUTO REPEAT

You have seen how the cursor control keys repeat automatically when held down. The spacebar, BACKSPACE, RUBOUT, and DELETE keys will do this too. Other keys may be made to repeat by holding down the REPEAT key along with the desired key. Try making about 30 periods by holding down REPEAT and pressing ".". Then use RUBOUT to erase the periods and restore your sentence to its original condition.

## 3.7 MOVING UP AND DOWN WITH ARROW KEYS

What if you want to correct something on the first line and the cursor is on the second line? Press UP (up-arrow) once, and the cursor will jump to the same column on the top line. Use LEFT or RIGHT to position the cursor to the desired location on the line. You may change any letter by merely typing over the existing letter. Pressing DOWN will return the cursor to the second line.

## 3.8 JUMPING TO THE BEGINNING OR END OF LINE

You can "jump" the cursor to column one of the current line from anywhere on the line by holding down SHIFT and pressing LEFT. In this manual the combination of these two keys will be written as "SHIFT/LEFT". Other combinations will be written in a similar fashion.

SHIFT/RIGHT (right arrow combined with SHIFT key) jumps the cursor to the last character on the current line, plus one. This is very useful for adding (appending) text to the end of an existing line. If you want to jump the cursor to the very last column of the display instead of the last occupied column plus one, press SHIFT/LEFT and then LEFT.

## 3.9 INSERTING AND DELETING CHARACTERS

You have learned how to replace characters in your document by moving the cursor and overtyping the text. What do you do if you need to insert or delete additional text? Suppose you want to change the word "document" in line 1 to "file". Move the cursor to the first character of this word and press the DELETE key (to the left of the left SHIFT key) once. Notice how the "d" disappears and the remaining text on the line moves left to close up the space. Hold down the DELETE key and let it auto-repeat until it "eats" all of the word "document".

Now press the INSERT key (to the right of the righthand SHIFT key). Notice that the highlighted word INSERT appears in the status area at the top of the display, indicating that WORDPIC is in INSERT mode. Now type the word "file". Notice how the rest of the text on the line moves over to make room for the new word as it is entered. When you are in INSERT mode, text is entered by pushing the existing text to the right. If you are not in insert mode, the text will overwrite the existing characters instead. To exit INSERT mode, press any cursor arrow key, BACKSPACE, or RETURN. Pressing RUBOUT in INSERT mode will not take you out of INSERT mode, so that you may correct minor errors made while inserting text.

## 3.10 STARTING A NEW LINE

The RETURN key can be used to start a new line without having to fill up the current line. Use the editing keys you have learned so far to change your document so that it looks as shown between the dashed lines below. Use the RETURN key twice to create the blank line between the first paragraph and the list of items, and again between the end of the list and the last paragraph:

---

This is my sample text which I am entering into my first file on the word processor. It is not difficult to use. I have already learned how to backup a disk, create a new document, and use the following keys:

1) CAPS LOCK.
2) RUBOUT.
3) BACKSPACE.
4) LEFT.
5) REPEAT.
6) RIGHT.
7) UP.
8) DOWN.
9) SHIFT/LEFT.
10) SHIFT/RIGHT.
11) DELETE.
12) INSERT.

I am now going to learn what happens when I enter enough text so that the text display window becomes full. When the text reaches the end of the twentieth line, the display will automatically "scroll" forward, leaving a new blank line at the bottom to enter text on.

---

## 3.11 DISPLAY WINDOW SCROLLING

When the display "scrolls", all the lines move up by one on the screen, with the topmost line disappearing off the screen. This line is no longer visible, but is still in the file. To prove this, hold down UP until the cursor reaches the top of the text window. Then press it again. The display scrolls backward to recall the line. The display scrolls automatically backward or forward when the cursor reaches the beginning or end of the display window. You cannot "cursor up" beyond the beginning of the file or "cursor down" past the end of the file, however.

## 3.12 INSERTING AND DELETING WHOLE LINES

Suppose you wish to delete items 11 and 12 from your list. Position the cursor so it is anywhere over the line "11) DELETE.", and press SHIFT/DELETE. The line will immediately disappear, and the lines below it will close up the void. The disk may "click". That is because WORDPIC saves your deleted text temporarily on disk. Later you will learn how to recover a line you deleted accidentally. The cursor is now on the line "12) INSERT.". Press SHIFT/DELETE again and it too will disappear.

Now suppose you wish to create two new blank lines to type on. Press SHIFT/INSERT twice, and two new empty lines will appear. Now retype items 11 and 12 back on your list on these two new lines.

Position the cursor back to the second line of your document, on the first letter of the word "difficult". Assume that you wish to insert the word "very" at this point. Press INSERT and type the word "very ". What happened to the line? Your display window should now look like this:

```
                WORDPIC Editor  1.0   (C) Copyright 1983 M.T.U.
File= TESTDOC:0          INSERT                    Col= 28  Line=    2  Top=    1
This is my sample text which I am entering into my first document on the word
processor.  It is not very difficult
to use.  I have already learned how to backup a
disk, create a new document, and use the following keys:

1) CAPS LOCK.
2) RUBOUT.
3) BACKSPACE.
4) LEFT.
5) REPEAT.
6) RIGHT.
7) UP.
8) DOWN.
9) SHIFT/LEFT.
10) SHIFT/RIGHT.
11) DELETE.
12) INSERT.

I am now going to learn what happens when I enter enought text so that the text
display window becomes full.  When the text reaches the end of the twentieth
| JUSTPARA | FIND | MARK | CHANGE |  | TABSTOP | PRTRCODE | CENTER | OTHER |
```

When an insertion causes a line to "overflow", all of the line to the right of the cursor except the word currently being "worked on" is automatically "wrapped" to a new line, so that you will have room to type. But in this case, when you are done with the insertion, there is a lot of blank space left on the second line. You need a way to "re-justify" the text of the paragraph between the margins. Press the JUSTPARA function key (f1). The display will be redrawn as shown below:

```
                WORDPIC Editor  1.0   (C) Copyright 1983 M.T.U.
File= TESTDOC:0                                   Col= 28  Line=    2  Top=    1
This is my sample text which I am entering into my first document on the word
processor.  It is not very difficult to use.  I have already learned how to
backup a disk, create a new document, and use the following keys:

1) CAPS LOCK.
2) RUBOUT.
3) BACKSPACE.
4) LEFT.
5) REPEAT.
6) RIGHT.
7) UP.
8) DOWN.
9) SHIFT/LEFT.
10) SHIFT/RIGHT.
11) DELETE.
12) INSERT.

I am now going to learn what happens when I enter enought text so that the text
display window becomes full.  When the text reaches the end of the twentieth
line, the display will automatically "scroll" forward, leaving a new blank line
| JUSTPARA | FIND | MARK | CHANGE |  | TABSTOP | PRTRCODE | CENTER | OTHER |
```

## 3.14 PARAGRAPH LIMITS

When justifying a paragraph, a very important consideration is "how much is a paragraph?". Anytime you have a completely blank line in your document, WORDPIC considers that to be the start of a new paragraph. Later you will learn another way to indicate the start of a new paragraph without requiring a blank line.

The JUSTPARA key always justifies the paragraph the cursor is currently on. Remember that WORDPIC will always justify everything between blank lines, even if you really don't think of it as a paragraph. For example, move the cursor down over the line "1) CAPS LOCK." and press JUSTPARA. What happened to your list? It should now look like this:

```
                WORDPIC Editor  1.0   (C) Copyright 1983 M.T.U.
File= TESTDOC:0                                  Col=  1  Line=    5  Top=    1

This is my sample text which I am entering into my first document on the word
processor.  It is not very difficult to use.  I have already learned how to
backup a disk, create a new document, and use the following keys:

1) CAPS LOCK.  2) RUBOUT.  3) BACKSPACE.  4) LEFT.  5) REPEAT.  6) RIGHT.  7)
UP.  8) DOWN.  9) SHIFT/LEFT.  10) SHIFT/RIGHT.  11) DELETE.  12) INSERT.

I am now going to learn what happens when I enter enought text so that the text
display window becomes full.  When the text reaches the end of the twentieth
line, the display will automatically "scroll" forward, leaving a new blank line
at the bottom to enter text on.

JUSTPARA | FIND | MARK | CHANGE        TABSTOP | PRTRCODE | CENTER | OTHER
```

You have now learned the most fundamental operations for creating and editing text. Later you will learn how to use other editing capabilities such as indentation, tabstops, underlining, etc. First however, you may want to learn how to print your document. This is covered in the next chapter.

## 3.15 RETURNING TO THE INDEX DISPLAY

Before you can print you must exit from the editor back to the INDEX display, which is the starting point for all WORDPIC operations. To do this, first press the OTHER function key (f8), which will display a new list of function key legends. Then press QUIT (f7). The QUIT function key tells WORDPIC you are finished editing the current file, and wish to return to the INDEX. Notice that the file name TESTDOC has been added to the INDEX display and is highlighted, indicating it is the current file of interest.

> CAUTION: YOU SHOULD ALWAYS USE THE QUIT FUNCTION KEY TO RETURN TO THE INDEX DISPLAY BEFORE REMOVING A DISK OR TURNING OFF THE SYSTEM. TURNING OFF THE SYSTEM, REMOVING THE DISK, OR PRESSING THE INT OR RESET KEYS WHILE IN EDIT MODE MAY CAUSE LOSS OF PART OR ALL OF YOUR DOCUMENT.

If you wish to postpone printing your document until another session, you may remove the disk and turn off the MTU-130 now.

CHAPTER 4

# PRINTING YOUR FIRST DOCUMENT

## 4.1 PRINTER-DEPENDENCIES

The WORDPIC system is available in versions to support several different types of printers, including low-cost dot matrix printers, daisy-wheel printers, and more expensive printers capable of special functions. Each of these printers has its own characteristics and capabilities. For example, some printers can print double-width characters and some cannot. The WORDPIC system is designed to make the most effective use of each of the printers. The examples shown in this manual are printed on the low-cost NEC 8023 printer. The individual characteristics of your printer are described in Chapter 5 of the WORDPIC Reference Manual.

## 4.2 THE PRINT MODULE

The WORDPIC system is divided up into several modules, as shown below. The topmost module is the WORDPIC INDEX, sometimes called the "shell". This is the module which you always see initially when starting up the system. It can activate any of several other modules as needed. When you created your first document, you entered the EDIT module, which is used to create and modify documents. The next module you will learn how to use is the PRINT module. As you might expect, the PRINT module prints your document on paper.

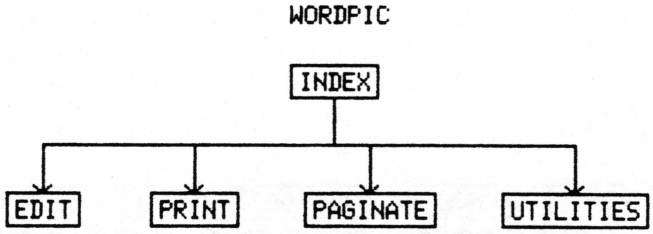


To start the PRINT module from the WORDPIC INDEX, first make sure that the file you want to print (TESTDOC) is highlighted. If it is not, use the UP, DOWN, LEFT or RIGHT cursor keys to select it. Then press the PRINT (f3) function key. The display will change to:

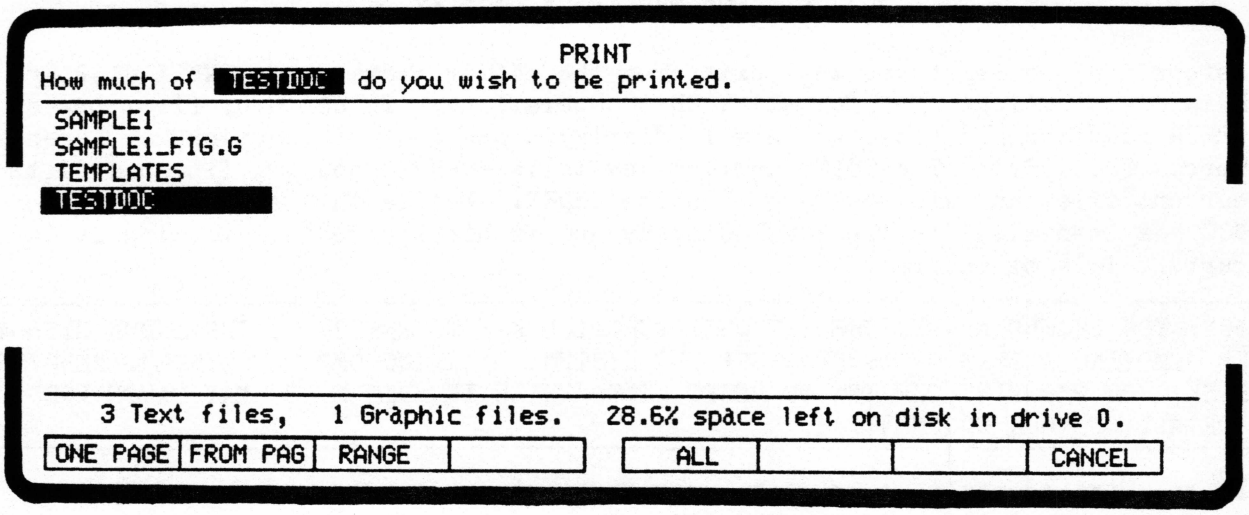

The function keys give you four choices for "how much to print", plus CANCEL. Pressing CANCEL will return you to the WORDPIC INDEX display without further action. Press ALL to print your entire document (even though it is only one page).

Next WORDPIC will ask you if you want a ROUGH or FINAL copy. Some printers are capable of printing rough drafts at high speed or "final" copies more slowly but with better quality. Press either the ROUGH or FINAL function key. The display will then change to:

```
                                PRINT
_____________________________________________________________________

WORDPIC Print 1.0   (C) Copyright 1983 M.T.U.
NEC-8023 Printer Version 1.0

PLEASE PUT THE FIRST SHEET OF PAPER IN THE PRINTER AND POSITION AT TOP OF FORM.
TO CONTINUE, SELECT SINGLE SHEET OR CONTINUOUS FORMS.

NOTE: IF FILES ON DRIVE 1 ARE TO BE ACCESSED, MAKE SURE THE REQUIRED DISK IS IN
DRIVE 1 AND THE DOOR CLOSED BEFORE CONTINUING.

_____________________________________________________________________
   3 Text files,   2 Graphic files.    27% space left on disk in drive 0.
| SINGLE |        | CONTIN. |        |        |        |        | ABORT |
```

Make sure the printer is properly connected to the computer, turned on, and that the paper is properly installed in the printer. Consult your printer manual, or see section 5.1 in your WORDPIC Reference Manual if you are not sure how to load the paper. The paper should be positioned to the desired top-of-form position. When all is ready, press either the SINGLE (for single sheets) or CONTIN (for continuous forms) function key. Printing will begin immediately.

The first thing you will probably notice about your printed document is that there is almost no left margin. The printing will start right at the left edge of the paper, instead of having a one inch margin. This is because you need to specify some document formatting commands in your file. In the next chapter you will learn how to specify margin sizes, select different type styles, and more.

When the printing is done, the INDEX display is restored automatically.

# CHAPTER 5

# BASIC DOCUMENT FORMATTING

## 5.1 DOCUMENT FORMATTING CODE LINES

As you have seen, a document file not only needs to specify what to print, but how to print it. This is done by entering code lines in your file when you create or edit your document. A code line appears in your file during editing just like any other line of text, so you can see it and change it as needed. However, when the file is printed, the PRINT module looks at the code line, but does not print it. Instead, it uses the information on the code line to determine how the following text should be printed. Code lines tell the PRINT module what type style to use, how much space to leave at the left edge of the paper, when to start a new page, etc. These special lines are called code lines because they all have a special, distinguishing code unlike any other character, which appears in column 1 of the line shown on the screen. There are four different kinds of code lines, which start with the special symbols shown below:

¶ Paragraph code line for setting paragraph attributes
↓ New page code line for setting page attributes
⊢ Tabstop code line for setting tabstops
⊡ Figure code line for printing a graphic image

You are now ready to add a code line to your first document so that the printed output will have a proper left margin.

## 5.2 RECALLING YOUR FIRST DOCUMENT

From the INDEX display, you can edit an existing file by first selecting it. If the TESTDOC file is not already selected (highlighted), use the four cursor arrow keys to select it. Then press the EDIT (f1) function key. WORDPIC will ask:

Do you wish to make a backup copy of TESTDOC?

When you edit a document with WORDPIC, there is always the possibility that you may make a change that you later decide you really didn't want to make. For that reason, you may wish to save an unmodified version of the document under another name. Later you will learn how to make and restore a backup copy of a file. Since TESTDOC is only a short test document, you don't really need to save a backup copy, so reply by pressing the NO function key (or the N key).

WORDPIC will then display the first twenty lines of your file in the usual EDITOR display format. You may now edit the file using the techniques learned in Chapter 3.

## 5.3 PARAGRAPH CODE LINE

The most common code line is the paragraph code line. It can be used to indicate the start of a new paragraph, and can also specify various attributes about the paragraph and all following paragraphs. Position the cursor to anywhere on the first line of your document. To generate a paragraph code line, press SHIFT/RETURN (shifted carriage return).

What happened? The paragraph code line was generated after the first line of the file, so your screen now looks like this:

```
                WORDPIC Editor  1.0   (C) Copyright 1983 M.T.U.
File= TESTDOC:0                                  Col=  1  Line=    3  Top=    1
This is my sample text which I am entering into my first file on the word
¶
processor.  It is not very difficult to use.  I have already learned how to
backup a disk, create a new document, and use the following keys:

1) CAPS LOCK.  2) RUBOUT.  3) BACKSPACE.  4) LEFT.  5) REPEAT.  6) RIGHT.  7)
UP.  8) DOWN.  9) SHIFT/LEFT.  10) SHIFT/RIGHT.  11) DELETE.  12) INSERT.

I am now going to learn what happens when I enter enough text so that the text
display window becomes full.  When the text reaches the end of the twentieth
line, the display will automatically "scroll" forward, leaving a new blank line
at the bottom to to enter text on.

| JUSTPARA | FIND | MARK | CHANGE |  | TABSTOP | PRTRCODE | CENTER | OTHER |
```

## 5.4 INSERTING A PARAGRAPH CODE LINE AT THE BEGINNING OF A FILE

Normally you will enter paragraph code lines as you complete a paragraph, by terminating the paragraph with SHIFT/RETURN. In this case though, you want to put the paragraph code line before the first paragraph, which already exists, so you will need to do it slightly differently. Move the cursor so that it is on the paragraph code line just created and press SHIFT/DELETE. The paragraph code line disappears. As you can see, code lines can be edited just like any other line. So how will you make a paragraph code line at the very start of the file? Try moving the cursor back to the first line and press SHIFT/INSERT to create a new blank line as the first line. Then put the cursor on line 1 and press SHIFT/RETURN to generate the code line. Now you have a paragraph code line, but you still have the extra blank line before it. Put the cursor on the blank line and press SHIFT/DELETE to get rid of it. The paragraph code line is now the first line of the file, and the cursor is on it.

Now that you have a paragraph code line, you may type commands on it to tell WORDPIC how to format the paragraph. With the cursor in column 2 or 3 of the paragraph code line, type:

OFFSET=1.0

This command tells WORDPIC that you want your text printed one inch from the left edge of the paper. Now if you reprint your document, it will have the same text as before, but it will be printed one inch further to the right. Remember, the paragraph code line will not be printed; it will just tell WORDPIC you want an offset of 1 inch. The display should now look like this:

```
                WORDPIC Editor  1.0   (C) Copyright 1983 M.T.U.
File= TESTDOC:0                                   Col= 13  Line=    1  Top=    1

¶ OFFSET=1.0
This is my sample text which I am entering into my first file on the word
processor.  It is not very difficult to use.  I have already learned how to
backup a disk, create a new document, and use the following keys:

1) CAPS LOCK.  2) RUBOUT.  3) BACKSPACE.  4) LEFT.  5) REPEAT.  6) RIGHT.  7)
UP.  8) DOWN.  9) SHIFT/LEFT.  10) SHIFT/RIGHT.  11) DELETE.  12) INSERT.

I am now going to learn what happens when I enter enough text so that the text
display window becomes full.  When the text reaches the end of the twentieth
line, the display will automatically "scroll" forward, leaving a new blank line
at the bottom to to enter text on.

| JUSTPARA | FIND | MARK | CHANGE |  | TABSTOP | PRTRCODE | CENTER | OTHER |
```

You may have noticed that although you may edit commands on the code line, you can't move the cursor on top of the special code in column 1. This is done so you won't accidentally type over the special code character, in which case your "OFFSET=1.0" would become ordinary text and be printable. If you want to get rid of a code line, you will need to use SHIFT/DELETE to delete the whole thing.

## 5.5 MORE ABOUT CODE LINE COMMANDS

Commands are always entered on codelines in the same general form as you just used, that is,

COMMAND=VALUE

where COMMAND is a command name (also called a keyword) and VALUE is the desired value. A number of COMMAND keywords are available, some of which will be described presently. You may put as many different commands as you like on the same code line, separated by spaces. For example,

¶ INDENT=1.0 TYPE=ELITE SPACING=2

tells the printer to use 1.0 inches of "whitespace" on the left edge of the paper, to use the elite type style, and to double space the lines. Once a command is given, it stays in effect until it is "countermanded" by a different command, so it is not necessary to respecify the commands for every paragraph. Thus your entire document will be printed with a 1 inch offset, unless you change it with another code line later.

Only certain values are legal for commands. For example, if you type

¶ TYPE=HELVETICA

then WORDPIC will display an "Illegal or missing value" error message in the command status area, because "HELVETICA" is not a legal type style for WORDPIC. Similarly, if you spell a command wrong, you will see an "Illegal or missing keyword" error message. You should then correct the code line using the editing techniques you have learned. It is important to correct any errors immediately since the effect of the error may not be obvious.

At this point it is appropriate to define what some of the available commands are, and what values may be specified. A complete list can be found in the WORDPIC Reference manual.

## 5.6 OFFSET COMMAND

As you have already seen, the OFFSET command is used to specify the amount of "whitespace" between the left edge of the paper and column 1 of the document, specified in inches. The default value is 0.0 inches, which explains why your first document printed starting right at the edge of the paper. Legal values are 0 to 25.5 inches in increments of 0.1 inches. Naturally if your particular printer only has a nine inch wide carriage, a value of 25.5 inches doesn't make much sense, but it is legal as far as WORDPIC is concerned. Note that the OFFSET command only affects the printed output; the text will still appear on the display in the same position. An example of a legal OFFSET command is:

¶ OFFSET=0.8

## 5.7 LEFT COMMAND

The LEFT command (not to be confused with the LEFT arrow key on the keyboard) is used to define the leftmost column on the screen in which text can be entered. Legal values are 1 to 77, with a default of 1. The value given for LEFT affects both the printed result and the display. Normally you will change LEFT in a document only when you want to have an indented section of text, such as a lengthy quote. The OFFSET command should be used instead of LEFT to set the amount of left margin whitespace for the document.

## 5.8 RIGHT COMMAND

The RIGHT command is used to set the maximum righthand column on the screen in which text can be entered. The default value for RIGHT is column 80 (except in a WIDE document, which is explained later). Legal values for RIGHT are 3 to 80, but RIGHT must be set to at least 2 greater than the value of LEFT. In other words, the minimum text width must be at least three columns. The value specified for RIGHT is also called the right margin. Normally you will reduce the right margin to generate narrower columns of text. For example, if a document will be printed on 5 inch wide cards, you might specify:

¶ RIGHT=45

## 5.9 EFFECTS OF LEFT AND RIGHT MARGINS ON THE DISPLAY

When you were editing your text, you may have noticed two small "v" marks on

```
                WORDPIC Editor  1.0   (C) Copyright 1983 M.T.U.
File= TESTDOC:0                                  Col=  1  Line=    3  Top=    1
This is my sample text which I am entering into my first file on the word
¶
```

These two "v" marks indicate the current position of the left and right margins. If you change the margins with LEFT or RIGHT commands, then these marks will move. The position of the "v" marks will be governed by the most recent code line margin settings above the cursor. If you move the cursor backwards across a code line which specifies LEFT or RIGHT, then the "v" marks will jump to the values set by the prior code line (if any). Code lines themselves are always 80 columns wide to give you maximum room for commands. Therefore when the cursor is exactly on a codeline, the "v" marks will always be in columns 2 and 80.

Since the margins affect the display as well as the printed output, you may have wondered what happens if you insert a code line with narrow margins above some existing text. Does the text immediately get "funneled" between the new margins, all the way to the end of your document? The answer is no; there is no immediate effect on the display. All text will remain in place and will still be printed as is if you PRINT it, even if it is outside the new margins. However, if you enter any new text, it will only appear between the new margins. If you <u>want</u> to funnel existing text between the new margins, all you have to do is put the cursor over the desired paragraph and press JUSTPARA. If you widen the margins instead and use JUSTPARA, the text will automatically fill out between the new wider margins.

## 5.10 TYPE COMMAND

The TYPE command is used to change type styles. Four different type styles may be specified:

| | |
|---|---|
| TYPE=PICA | Pica type style, 10 characters per inch |
| TYPE=ELITE | Elite type style, 12 characters per inch |
| TYPE=COND | Condensed type style, usually 17 characters per inch |
| TYPE=PROP | Proportional type style, variable number of characters per inch |

The default is TYPE=PICA. The TYPE command only affects the printed output, not the display. Samples of the four type styles for the NEC printer are given below. Output from other printers will be similar but not identical.

```
ABCDEFGHIJKLMNOPQRSTUVWXYZ 0123456789 abcdefghijklmnopqrstuvwxyz
This is the PICA type style, which prints 10 characters/inch.

ABCDEFGHIJKLMNOPQRSTUVWXYZ 0123456789 abcdefghijklmnopqrstuvwxyz
This is the ELITe type style, which prints 12 characters/inch.

ABCDEFGHIJKLMNOPQRSTUVWXYZ 0123456789 abcdefghijklmnopqrstuvwxyz
This is the COND type style, which prints 17 characters/inch.

ABCDEFGHIJKLMNOPQRSTUVWXYZ 0123456789 abcdefghijklmnopqrstuvwxyz
This is the PROP type style, which prints proportionally.
```

The proportional type style is different from the other styles because all the characters do not occupy the same amount of space. For example, the character "W" is much wider than "i", in fact more than twice as wide. This gives text a more attractive appearance, but also creates a few problems, especially when working with tabular printout. More information on proportional printing will be given later.

## 5.11 JUSTIFY COMMAND

You have already learned how to use the JUSTPARA key to fill out text between the margins on the display by "pulling up" whole words from following lines. There is another kind of text justification which only affects the printed results. This is set by the JUSTIFY command on a code line. There are three legal choices of values for JUSTIFY:

| | |
|---|---|
| JUSTIFY=OFF | Print text "ragged right" |
| JUSTIFY=FLUSH | Print text "flush right" by inserting space between words |
| JUSTIFY=PROP | Print text "flush right" by inserting space between characters |

The default is JUSTIFY=OFF, which prints the text "as is". If you specify JUSTIFY=FLUSH, then the PRINT module will automatically insert additional spaces as needed between words so that every line of text will end in exactly the same column at the right margin, except the last line of a paragraph, which is printed "as is". JUSTIFY=PROP also forces each line to end at exactly the right margin, but it does so by inserting tiny spaces between characters in the line instead of whole blank spaces between words. This gives a smoother, more attractive appearance than FLUSH justification. The three paragraphs below contain identical text, but were printed with JUSTIFY=OFF, JUSTIFY=FLUSH, and JUSTIFY=PROP, respectively:

**Unlike many word processors which limit document size to a few hundred lines or less, WORDPIC can edit documents of up to 1,000,000 characters on a double-sided disk. Any portion of the document can be rapidly selected for display using automatic, bidirectional scrolling. The '130 displays full 80 character lines, with the ability to edit lines of up to 160 characters. The full ASCII character set is displayable.**

**Unlike many word processors which limit document size to a few hundred lines or less, WORDPIC can edit documents of up to 1,000,000 characters on a double-sided disk. Any portion of the document can be rapidly selected for display using automatic, bidirectional scrolling. The '130 displays full 80 character lines, with the ability to edit lines of up to 160 characters. The full ASCII character set is displayable.**

**Unlike many word processors which limit document size to a few hundred lines or less, WORDPIC can edit documents of up to 1,000,000 characters on a double-sided disk. Any portion of the document can be rapidly selected for display using automatic, bidirectional scrolling. The '130 displays full 80 character lines, with the ability to edit lines of up to 160 characters. The full ASCII character set is displayable.**

Proportional justification is only allowed with proportional TYPE. If you specify JUSTIFY=PROP with another typestyle, WORDPIC will treat the command as though you selected JSUTIFY=FLUSH instead. More special considerations for using proportional justification will be described later.

When using FLUSH or PROP justification, you should remember to insert a code line with JUSTIFY=OFF before a list of items on short lines such as you had in your original TESTDOC file, or the items will be "stretched out" to the full width set by the margins. If you only need to defeat justification on a couple of lines, it may be easier to just put a paragraph code line (with no commands on it) after each line instead, because the WORDPIC PRINT module always prints the last line of a paragraph "as is". A blank line between items will also work, since it is treated as a paragraph separator, but unlike the paragraph code line, a blank line will be printed.

## 5.12 REPRINTING YOUR FIRST DOCUMENT

Now that you have learned a few of the basic formatting commands, you may wish to experiment by trying a couple of different TYPE, OFFSET and JUSTIFY commands on your paragraph code lines, and then printing the results. Remember that to get from the EDITOR module back to WORDPIC you need to press OTHER and then QUIT. Pushing the PRINT function key will then start the PRINT module dialog.

There are many more commands available for code lines, which will be introduced in the next three chapters.

CHAPTER 6

# MORE ON EDITING

## 6.1 THE SAMPLE1 FILE

In this chapter you will learn how to use the function keys in the EDITOR module of WORDPIC. In order for you to get some practice working with a larger document, a file called SAMPLE1 is included on the disk which you will be using throughout this chapter. This sample file is actually a draft copy of a user manual for another MTU product, and is about 15 pages long when printed.

From the INDEX display, select the file SAMPLE1, and press the EDIT function key. To get some practice saving a backup file, reply YES to the question,

Do you wish to make a backup copy of SAMPLE1?

You will then be asked for a name for the backup file. Type in SAMPLE1_BAK and press RETURN (the underline is obtained with SHIFT/-). It will take about 9 seconds to copy the file, after which the following display will appear:

```
                WORDPIC Editor  1.0   (C) Copyright 1983 M.T.U.
File= SAMPLE1:0                                  Col=  2  Line=    1  Top=    1
¶█TYPE=ELITE OFFSET=0.9
▶   T    T
                              CHESTR USER'S MANUAL

                               TABLE OF CONTENTS

Introduction.............................................................4
    Equipment Requirements...............................................5
    Unpacking and Setup..................................................5

Creating an Image Using the CHESTR Program...............................6
    Startup Dialog.......................................................6
    Drawing With the Lightpen............................................6
    Direction Conventions................................................7
    Chemical Symbols.....................................................7
    Circles..............................................................8
    Correcting Errors....................................................8
    Crosshairs...........................................................8
    Exiting the Program..................................................9
 JUSTPARA | FIND | MARK | CHANGE |  TABSTOP | PRTRCODE | CENTER | OTHER
```

## 6.2 THE STATUS LINE

You have probably noticed that the status line near the top of the display changes slightly as you edit your file. The lefthand part of the status line specifies the name of the file you are currently working on, followed by ":0". This indicates which disk the file is on. Later you will learn how to edit a file in disk drive 1 instead of disk drive 0.

The number after "Col=" indicates the column the cursor is currently on. The number after "Line =" indicates which line number in the file the cursor is currently on. The number after "Top=" shows the line number of the file which is currently displayed at the top of the text window. Line numbers are automatically maintained by WORDPIC and are updated instantly as lines are deleted or inserted.

When editing, you will frequently want to examine various parts of the file. In a large file it is tedious to scroll line-by-line through the file to get to the part of interest, so several shortcuts are provided.

## 6.3 SHIFT/UP AND SHIFT/DOWN

Try SHIFT/DOWN (shifted down-arrow) and watch what happens. The display will immediately redraw, starting with line 21 of the file (check TOP= on the status line). Each time SHIFT/DOWN is pressed, the next 20 lines of the file are displayed. Now press SHIFT/UP. Each time SHIFT/UP is pressed, the twenty prior lines are displayed. Press SHIFT/UP again and nothing happens, because you can't backup beyond the beginning of the file.

## 6.4 HOME AND SHIFT/HOME

The only key in the cursor cross you have not used is HOME. HOME jumps the cursor to the upper left hand corner of the text window. SHIFT/HOME positions the window to beginning-of file from anywhere in the file, and homes the cursor to column 1, line 1.

## 6.5 FIND FUNCTION KEY

For making larger "jumps" in the file, the FIND key is used. It can be used in a variety of ways. The simplest use of the FIND function key is to find a certain line number in the file. Try pressing the FIND key now (f2). The word FIND appears on the command line (the very top line of the command/status area), followed by the cursor. This is something new. The previous function keys you have used have either done something immediately or prompted you with a question. This time you must complete the FIND command yourself by telling WORDPIC what you want to find. Type in the number 118 and press RETURN, as shown below:

```
 FIND  118
                WORDPIC Editor  1.0   (C) Copyright 1983 M.T.U.
File= SAMPLE1:0                                  Col=  2  Line=    1  Top=    1
-x-------------------------------------------------------------------------x
¶ TYPE=ELITE OFFSET=0.9
▶   T    T
                              CHESTR USER'S MANUAL

                              TABLE OF CONTENTS
```

The screen will display the text in lines 118 through 137 of the file, as indicated by the status line. Now try:

FIND 9999

After a second or two, the monitor will display a blank window except for the first line, and the status line indicates line 656 is the current line. What happened? If you try to FIND a line that is beyond end-of-file, you will see the very last line instead. Line numbers may be specified up to 65535, but may not include a comma.

You may also backup to a previous line using FIND. Try "FIND 400", for example. Sometimes it is more convenient to specify a distance (displacement) from the present location rather than a specific line number. For example, you might want to backup 100 lines from where you are. This can be done with:

FIND -100

If you specify a number with a "+" or "-" in front of it, WORDPIC will interpret it as a displacement. Therefore FIND 100 will locate line 100, but FIND +100 will advance 100 lines from the present display.

## 6.6 FINDING A TEXT STRING

The FIND key can also be used to locate a specific word or phrase. Position the text window to beginning-of-file, and then try:

FIND "hexagon"

Be sure to include both quote marks. The screen will then display your file beginning with line 168, which is the first line in the file containing the word "hexagon". The cursor will be on the first character of the desired word. In a FIND command, the group of characters between the quote marks is called the character string, and may contain any number of characters, including blanks, up to a full line. Either single (') or double (") quote marks may be used to enclose the string, but must be the same on both ends. The string may not include the same kind of quote mark that is being used to enclose it. Therefore FIND "Let's" is legal, but FIND 'Let's' is not. In order for the string to be found, it must exist entirely on one line, and not be split across two or more lines.

It is important to remember that a search for a text string always occurs in the forward direction only and always begins with the current cursor location. The search will stop at the first matching string which is found.

Now try:

FIND 'HKLE'

After a few seconds of disk activity, the WORDPIC EDITOR will display:

```
 FIND  'HKLE'
-------------^
NOT FOUND. (PRESS RETURN TO PROCEED.)
at the HEXAGON button.  It should beep.  Remove the pen immediately when the
beep is heard.  It doesn't matter if it beeps twice.  Pen response is best if
```

This indicates that the string was not found anywhere from the present position to the end of file. Press RETURN to acknowledge the message, and the cursor will resume its normal position in the text window.

## 6.7 QUALIFIED SEARCHES WITH FIND

Sometimes you will not want to search the entire remainder of the file for a string. You can limit the search by specifying a line number in parentheses after the string. For example:

```
FIND 'HIS'(200)
```

will search forward from the present location through line 200 only. The line number you specify must be greater than the line number the cursor is presently on, or you will get an "Illegal or missing argument" error. Alternatively, you may specify the limit as a displacement (in the forward direction only) by using a plus sign in front of the number. For example,

```
FIND ' your own' (+250)
```

will search the next 250 lines for the specified string. You may not search backwards.

Sometimes you may want to limit the search to certain columns instead of certain lines. For example,

```
FIND "WRITE"(C1)
```

searches for the word WRITE which begins exactly in column 1. The letter "C" indicates a column number rather than a line number. A range of columns may be specified, for example:

```
FIND ';'(C8-17)
```

searches all lines left in the file for the first semicolon anywhere in columns 8 through 17. The dash is required between the two column limits. Both line and column limits may be specified. In this case, the line limit must be specified first, and the "C" must still be included to indicate the column limits. For example:

```
FIND 'this' (+300 C40-)
```

searches the next 300 lines for "this" occurring from column 40 to the end of the line.

You may have noticed that when you searched for "hexagon", WORDPIC found "HEXAGON". By default, characters in a string will match both upper and lower case letters. If you only want to match the exact string instead, you may specify a "case sensitive" search by putting the letter S as the first character of the qualifier. For example:

```
FIND 'The'(S +100)
```

will match "The" but not "the" or "THE" if found in the next 100 lines.

## 6.8 COMBINED SEARCHES

Multiple string or line arguments may be "strung together" on a single FIND command, separated by blanks. For example,

FIND -100 'Therefore'

will first backup the display by 100 lines and then search forward for the first occurrence of "Therefore". The display will not be updated until the complete operation is finished. If the string is not found, the display will be updated to the position after backing up 100 lines. A particularly useful form of combined search is:

FIND 9999 -20

which will display the last 20 lines of the file (assuming the file has less than 10,000 lines).

## 6.9 CTRL/B AND CTRL/X

If you search for a string which is used frequently in a document, the string that WORDPIC finds may not be the occurrence of the string you were looking for. A useful combined search for this case is:

FIND +1 'string'

which will advance the cursor to the next line and search for the next occurrence of 'string'. If you didn't have the +1 included in the command, then WORDPIC would find the same string again since the cursor is on the first letter of the matching string in the text window. Also, there is a shortcut you can use to avoid the tedium of having to type in the same command over and over. The CTRL/B key (CTRL held down while typing B) will recall the last command you entered. To repeat the prior command, just press CTRL/B and RETURN. If you press CTRL/B more than once, it will continue to <u>backtrack</u> through all the commands you have entered previously. When you find the command you want, just press RETURN and it will be executed. If you keep pressing CTRL/B you can usually backtrack all the way to the first command you entered on entry to the WORDPIC EDITOR; the next CTRL/B will "wrap around" to recall the most recently entered command again. If you have had a very long editing session, the list may "wrap around" after about 20 to 30 commands, since WORDPIC can only backtrack a maximum of 256 characters before "wrapping around".

After seeing the prior command with CTRL/B, if you decide you want to change it slightly, you may edit it in the usual fashion and then press RETURN. If you decide you want a different command altogether, just push a different function key. If you decide you don't want <u>any</u> command, but just want to move the cursor back to the text window, press CTRL/X and RETURN. CTRL/X cancels the current command.

## 6.10 CHANGE FUNCTION KEY

The CHANGE function key operates much like the FIND key, but allows you to replace one or several occurrences of a specified string with another string. The simplest form of CHANGE replaces one occurrence of a given string with another string. Use SHIFT/HOME to return to the beginning of the sample file. Then press the CHANGE function key and complete the command as shown below, pressing RETURN at the end:

CHANGE 'egg-shaped' 'oval'

Be careful to include all the quote marks shown. After a moment, the display will look like this:

```
CHANGE 'egg-shaped' 'oval'
                WORDPIC Editor  1.0   (C) Copyright 1983 M.T.U.
CHANGE THIS STRING (Y/N/C=CANCEL)?=
the auto subscripting of digits.  For example, if you wanted to enter "78
degrees", you could type in "^7^8 degrees" to prevent the digits from being
subscripted.  Numeric superscripts are possible using a ^^ prefix.

                                CIRCLES

    You may generate a circle by first picking the center point, then picking
the CIRCLE button, and finally picking any point on the circumference.  When the
circle is drawn in the workspace, it will appear somewhat egg-shaped rather than
circular, due to the non-symmetrical aspect ratio of the screen.  Do not worry
about this.  The CHESTRPLOT program automatically adjusts for aspect ratio so
the final printed image will be truly circular.

                            CORRECTING ERRORS

    Naturally you may make errors, or you may not get something positioned
exactly where you want it on the first try.  Pick the UNDO LAST button, and
the last item entered will be removed from the work area.  CHESTR actually
 JUSTPARA | FIND | MARK | CHANGE |  TABSTOP | PRTRCODE | CENTER | OTHER
```

The candidate string to be changed is shown highlighted in the display window. The highlighted prompting message in the command/status area is requesting verification before making the change. Press Y (you won't need to press RETURN), meaning you wish to accept the change. If you press N instead, WORDPIC will search for the next occurrence of the string. Typing a C aborts the CHANGE command with the message "0 changes made". The prompt for Y, N, or C is sometimes called a "veto" prompt, because it gives you the chance to forbid the change. Since you typed Y, the change is made and the display is altered as shown below:

```
CHANGE 'egg-shaped' 'oval'
                WORDPIC Editor  1.0   (C) Copyright 1983 M.T.U.
1    CHANGES MADE. (PRESS RETURN TO PROCEED.)
the auto subscripting of digits.  For example, if you wanted to enter "78
degrees", you could type in "^7^8 degrees" to prevent the digits from being
subscripted.  Numeric superscripts are possible using a ^^ prefix.

                                CIRCLES

    You may generate a circle by first picking the center point, then picking
the CIRCLE button, and finally picking any point on the circumference.  When the
circle is drawn in the workspace, it will appear somewhat oval rather than
circular, due to the non-symmetrical aspect ratio of the screen.  Do not worry
about this.  The CHESTRPLOT program automatically adjusts for aspect ratio so
the final printed image will be truly circular.

                          CORRECTING ERRORS

    Naturally you may make errors, or you may not get something positioned
exactly where you want it on the first try.  Pick the UNDO LAST button, and
the last item entered will be removed from the work area.  CHESTR actually
 JUSTPARA | FIND | MARK | CHANGE |  TABSTOP | PRTRCODE | CENTER | OTHER
```

The message at the top indicates the number of changes made. It is possible to make multiple changes with one command, as you will see momentarily. Notice that the string "egg-shaped" has been replaced by "oval". Press RETURN to erase the message and return the cursor to the work area.

The CHANGE command searches for the first string specified on the command and replaces it with the second string. The search is carried out exactly like FIND, and qualifiers may be specified in parentheses after the first string. If no second string is given, then the first string is simply deleted when it is found. For example:

CHANGE 'whatsoever' (+100)

will delete the first occurrence of "whatsoever" in the next 100 lines.

## 6.11 MULTIPLE CHANGES

Multiple changes may be made with a single CHANGE command by specifying a repeat count in front of the first string. For example:

CHANGE 5 'his ' 'his or her '

will change the first five occurrences of "his " to "his or her ". As each candidate string is found, WORDPIC will pause, highlight the candidate string, and prompt for verification before changing the string.

Occasionally you may wish to make a large numer of changes without having to accept each candidate change individually. This can be done by "pre-answering" the "CHANGE THIS STRING (Y/N/C=CANCEL)?" prompt with a "Y" after the replacement string on the command. For example:

CHANGE 9999 "*" "+" Y

changes all asterisks in the document to plus signs, (assuming that fewer than 10,000 asterisks are present), without pausing for verification of individual cases. The display will be updated only after the last change is made. A message will indicate the actual number of changes made (which will probably be less than 9999).

As you may have noticed, the new string does not have to be the same size as the candidate string in a CHANGE command. If the new string is substantially longer or shorter than the string being replaced, you may want to use the JUSTPARA function key to rejustify the paragraphs containing changes after they are done. In a multiple-change operation, if the replacement string is enough longer than the candidate string that word-wrap occurrs, WORDPIC will pause and display the message, "CHANGE CAUSED WORD WRAP. WANT TO CONTINUE CHANGING (Y/N)?". This gives you the opportunity to stop and re-justify the paragraph immediately if you wish, or continue on to the next change. This pause and prompt can be suppressed in the same way as the veto option, by adding a second Y to the end of the command line as shown below:

CHANGE 9999 "*" "+" Y Y

## 6.12 TABSTOP FUNCTION KEY

Now return to the beginning of the sample file by pressing SHIFT/HOME. Notice the second line of the file contains a line that looks like this:

```
¶TYPE=ELITE OFFSET=0.9
▶  T    T
```

This is a Tabstop code line. It sets the tabstops much like the tabstops on a typewriter. Unlike other code lines, there are no commands on a tabstop code line. Instead, each non-blank character on the code line represents a tabstop position. In the sample file, tabstops are set in columns 5 and 10, which contain the letter T. Move the cursor to column 1 of any line below the tabstop code. Now press the TAB key on the left side of the keyboard. The cursor jumps to the first tabstop position, column 5. Press TAB again and the cursor advances to column 10. If you press TAB again, nothing happens, because there are no more tabstops set.

Now move the cursor down to line 6, just below the "TABLE OF CONTENTS" line and press the TABSTOP function key (f5). A new blank tabstop code line will appear with the cursor in column 2. Move the cursor to the right and type a T in columns 3, 6, and 9. Then press RETURN to move the cursor to column 1 of the next line and try the TAB key again. The new tabstops are now in effect. If you move the cursor up above the new tabstop line, then the old tabstops set by the tabstop code line on line 2 will be in effect.

You may put any number of tabstops you wish on a tabstop code line, and any number of tabstop code lines may be placed in the file. The tabstop code line has no effect on printing, only on the display.

Now delete your new tabstop code line using SHIFT/DELETE before proceeding.

## 6.13 CENTER FUNCTION KEY

The CENTER function key immediately centers the line the cursor is on between the current left and right margins. Insert a new line below the "CHESTR USER'S MANUAL" line, and type "VOLUME I", starting at the left margin. Then press CENTER. The line will be immediately centered. Centering printed text when using the proportional type style calls for some special considerations, and will be discussed in chapter 8.

Delete your newly-generated centered line before proceeding.

## 6.14 CODE CHARACTERS

Use a FIND command to position the text window to line 39 of the sample file. The line at the top of the text window contains two strange-looking characters:

```
x-----+-----+-----------------------------------------------------------x
                    ⌣INTRODUCTION⌣
```

The two strange characters are embedded code characters, or simply embedded codes, which are used to tell the PRINT module to perform some special function. In this case the codes tell the printer to "begin underlining" and "stop underlining", respectively. When this line is printed, it will look like this:

**INTRODUCTION**

The text between these two codes is underlined when it is printed, but not on the display. The codes themselves will not be printed on paper, but are shown on the EDITOR display so you can see and change them as necessary. Embedded codes perform a similar function to code lines, but only occupy a single character instead of a whole line. A total of ten embedded codes are supported by WORDPIC, as shown below:

| | |
|---|---|
| ⌣ | Begin underline |
| ⌣ | End underline |
| ⌣ | Begin bold |
| ⌣ | End bole |
| ⌣ | Begin wide |
| ⌣ | End wide |
| ℙ | Printer pause |
| ↘ | Subscript |
| ↗ | Superscript |
| ← | Backspace |

The effects of bold print, wide print, subscripts, superscripts, and backspace are shown by the following example:

⌣Exponential Service⌣

E(t↘s↗←↗2↘)=2E↗2↘(t↘s↗)

When printed, the sample above looks like this:

**Exponential Service**

$$E(t_s^2)=2E^2(t_s)$$

To see how to enter embedded codes from the WORDPIC EDITOR, first use SHIFT/INSERT to open up a few blank lines to work on. Then press the PRTRCODE function key (f6). This changes the function key legends to:

| UNDERbeg | BOLD beg | WIDE beg | PAUSE | | SUBSCRPT | SUPERSCR | | MAINMENU |
|---|---|---|---|---|---|---|---|---|

This set of function keys is called the "printer code sub-menu".

## 6.15 UNDERLINING, BOLD, AND WIDE PRINT EMBEDDED CODES

Press the UNDERbeg (underline begin) function key (f1). The begin-underline code will appear on the screen, and the legend for function key f1 will immediately change to UNDERend (underline end). Type a few normal characters, and then press the UNDERend function key, noting that the legend for function key f1 is restored to UNDERbeg. The UNDERline, BOLD, and WIDE function keys alternate or "toggle" between the "begin" code and the "end" code. This is handy since these functions are normally used in complementary pairs.

## 6.16 PRINTER PAUSE EMBEDDED CODE

Now press the PAUSE function key. Its legend does not change, because there is no complementary function. When the printer encounters a PAUSE embedded code, it will stop printing and display a message indicating that a PAUSE has been encountered. A PAUSE is usually inserted to provide the operator with time to perform some manual operation with the printer, such as changing print wheels, ribbon colors, forms, etc. Printing is resumed after a pause when the operator manually presses the RETURN key.

## 6.17 SUBSCRIPTS AND SUPERSCRIPTS

The SUBSCRPT and SUPERSCR function keys are used to tell the printer to move the carriage to print subscripts or superscripts (also known as superior and inferior numbers). Press SUBSCRPT and the subscript embedded code will appear on the screen. Like other embedded codes, this character will not print. Instead, all characters after the subscript code will be printed about a half line lower than the characters before it. Therefore you will want to enter a complementary superscript embedded code at the end of the subscripted characters. Superscripts operate in a similar fashion. Subscripts and superscripts do not have to be balanced, and more than one subscript or superscript can be entered to move additional distances.

## 6.18 BACKSPACE CODE CHARACTER

The remaining embedded code is BACKSPACE, which is not on any of the function key legends. Instead, the backspace code is entered by first pressing and releasing ESC, and then pressing BACKSPACE. This two-key sequence will generate the BACKSPACE embedded code on the screen. You need to press ESC before BACKSPACE to tell WORDPIC that you really want to enter the BACKSPACE code instead of just moving the cursor backwards on the screen for some editing operation.

The BACKSPACE embedded code will not print, but instead will cause the printer to backup by one space. This can be used to overstrike two or more characters. One common use for the BACKSPACE embedded code is to place a subscript and superscript in the same column. For example, the line:

X↘i↗←↗Z↘

will print as:

$$X_i^2$$

To return to the normal EDITOR mode, press the MAINMENU function key. Delete your practice lines with embedded codes before proceeding.

## 6.19 BLOCK OPERATIONS USING MARK

One of the big advantages of the WORDPIC system is that you can move large blocks of text easily. The following block operations can be performed on blocks of one or more whole text lines:

Block Delete
Block Copy
Block Move
Block Save
Block Recall

All of these operations except Block Recall begin with the MARK function key.

## 6.20 BLOCK DELETE

Move the text window to the beginning of the sample file by pressing SHIFT/HOME. Now suppose that you wish to delete the entire table of contents from the document. Press the MARK function key, and the function keys will immediately change to:

| SPLIT | FIND | | LINE | | PARA | PAGE | ACTION | CANCEL |
|---|---|---|---|---|---|---|---|---|

This list of function keys is called the "Mark sub-menu". Now position the cursor to the first line of the table of contents (line 5) and press LINE (f4). All of line 4 is immediately highlighted, indicating that it is "marked", and the cursor advances to the next line. Now page the display forward using SHIFT/DOWN, then move the cursor down to the last line of the table of contents (line 35 of the file). Press LINE again. All of the lines from line 35 to the top of the text window are highlighted. Press SHIFT/UP and you will see that all of the lines from line 5 down to line 35 are indeed marked (highlighted). Now that the block of lines is designated, you need to tell WORDPIC what to do with them. Press the ACTION function key (f7), and the function keys will immediately change to show you the choices available:

| | | | | | | | |
|---|---|---|---|---|---|---|---|
| MARKMORE | FIND | | DELETE | COPY | MOVE | SAVE | CANCEL |

This list of function keys is called the "Mark/Action sub-menu". Press the DELETE function key, and the entire block will disappear. The normal EDIT function key legends will also be restored. The line in the sample file, "INTRODUCTION", that used to start on line 36, is now on line 3.

## 6.21 RECOVERING DELETIONS WITH RECALL

When WORDPIC does a block DELETE, it saves what you delete in a temporary, invisible holding area called the "delete buffer". If you decide you really didn't want to delete the block after all, you can recover it from the delete buffer. However, the save buffer only saves the very last item deleted. If you delete another block, it will replace the previous block in the save buffer. Please note that SHIFT/DELETE also saves its deleted line in the delete buffer, and it too will replace the entire contents of the delete buffer, regardless of size. If you delete 100 lines with a block delete, and then delete one line with SHIFT/DELETE, the only thing you will be able to recover is the one line removed with SHIFT/DELETE.

How do you recover the deleted block? Press the OTHER function key (f8), which is used to access an alternate menu of less-frequently needed function keys:

| | | | | | | | |
|---|---|---|---|---|---|---|---|
| RECALL | FIND | MACRO | FIGURE | NEWPAGE | UPDATE | QUIT | OTHER |

Then position the cursor to line 4, if it is not already there. When the deleted block is restored, it will be inserted above the line the cursor is on. It is possible therefore to restore the deleted block at a different location than where it came from. Now press the RECALL function key (f1). The word RECALL will appear on the command line at the top of the screen, followed by the cursor. Just press RETURN. This will restore the table of contents. Later on you will learn other uses for the RECALL key which require more information to be typed on the command line before RETURN.

If you do a block DELETE on a very large block (larger than about 3000 characters), you will be given a warning message saying, "MARKED BLOCK TOO BIG TO RECALL. DELETE IT (Y/N)?". This indicates that the marked block is too large to fit in the save buffer. If you reply with a Y, the block will be deleted and will not be recoverable with RECALL. If you reply N, the block will not be deleted, but will remain marked (highlighted), in case you want to SAVE it (discussed shortly) instead.

## 6.22 MORE ON LINE MARKING

Press the MARK function key to redisplay the "Mark submenu" of functions:

| SPLIT | FIND | | LINE | | PARA | PAGE | ACTION | CANCEL |
|---|---|---|---|---|---|---|---|---|

You have already used the LINE function to mark a block of lines. It can also be used to mark single lines. Each time LINE is pressed, one more line is marked and the cursor advances to the next line. If the cursor is moved to a new location and LINE is pressed, all lines between the first marked line and the last marked line will be marked. The lines can be marked in any order. The last line can be marked first and then the first line if you wish.

## 6.23 PARAGRAPH MARKING

The PARAGRAPH function key can be used to mark the paragraph the cursor is currently on. The bounds of the paragraph are determined the same way as for JUSTPARA; either a blank line or a Paragraph code line terminates the paragraph. Pressing PARA again will mark an additional paragraph and advance the cursor to the next paragraph. Paragraph marks may be combined with line marks or page marks (described below) to form a composite block. Once the desired block has been obtained, the ACTION function key is used, as described above.

## 6.24 PAGE MARKING

Entire pages may be marked by pressing the PAGE function key. A page is bounded by a newpage code line (described later). There is no upper limit to the size of a page, so you should be careful not to mark a page in a file without newpage code lines (such as the sample file), because the whole document will be marked!

## 6.25 CANCEL FUNCTION KEY

At any time during a MARK operation you may cancel the entire operation by pressing the CANCEL function key (f8). This will remove all highlighting (marking) and restore the main EDITOR function key legends.

## 6.26 FIND FUNCTION KEY

The FIND function key on the "Mark sub-menu" performs exactly the same as the regular FIND function key. It is provided on the Mark submenu to make it easier to find the desired lines for marking.

## SPLIT FUNCTION KEY

Occasionally you may want to mark a block of text which includes only part of a line at the beginning or end. Since the smallest amount of text you can mark is a complete line, the SPLIT function key provides a convenient way to split a line before marking. To try this, first do a "FIND 163" command, which should display:

```
                WORDPIC Editor  1.0   (C) Copyright 1983 M.T.U.
File= SAMPLE1:0                                  Col= 55  Line=  166  Top=  163

cursor (the "x") to several different grid points.

    Once you have picked a grid point, you may then command CHESTR to draw some
kind of object by picking one of the menu "buttons". Assuming that you now have
the "x" blinking somewhere near the middle of the work area, point the lightpen
at the HEXAGON button.  It should beep.  Remove the pen immediately when the
beep is heard.  It doesn't matter if it beeps twice.  Pen response is best if
you "sweep" across the button rather than just pointing to one of the letters.
Once you have "picked" the HEXAGON button, it will be highlighted to indicate
its selection.

    Now use the lightpen to pick the grid point two grid points to the right
of the one that is blinking, and remove the pen.  A hexagon should immediately
be drawn with one side between the two picked grid points.  The HEXAGON button
will no longer be highlighted, indicating that the command is completed.  Notice
that the second point picked is now blinking, indicating the current cursor
location.

    You may now continue to create shapes as desired by the same method.  If
you pick another "button" immediately, then the last cursor position will be
 SPLIT | FIND |      | LINE |  PARA | PAGE | ACTION | CANCEL
```

Now assume that you wish to copy the sentences beginning with "Assuming that you..." and ending with "...beeps twice." in the first paragraph. Move the cursor to the "A" in "Assuming", and press SPLIT. The line will be broken at that point so that "Assuming" starts on a new line. Now move the cursor to the "P" in "Pen" just after the last desired word and press SPLIT again. You have now separated out the desired sentences, which after marking look like this:

```
                WORDPIC Editor  1.0   (C) Copyright 1983 M.T.U.
File= SAMPLE1:0                                  Col=  1  Line=  171  Top=  163

cursor (the "x") to several different grid points.

    Once you have picked a grid point, you may then command CHESTR to draw some
kind of object by picking one of the menu "buttons".
Assuming that you now have
the "x" blinking somewhere near the middle of the work area, point the lightpen
at the HEXAGON button.  It should beep.  Remove the pen immediately when the
beep is heard.  It doesn't matter if it beeps twice.
Pen response is best if
you "sweep" across the button rather than just pointing to one of the letters.
Once you have "picked" the HEXAGON button, it will be highlighted to indicate
its selection.

    Now use the lightpen to pick the grid point two grid points to the right
of the one that is blinking, and remove the pen.  A hexagon should immediately
be drawn with one side between the two picked grid points.  The HEXAGON button
will no longer be highlighted, indicating that the command is completed.  Notice
that the second point picked is now blinking, indicating the current cursor
location.

      | FIND |      | LINE |  PARA | PAGE | ACTION | CANCEL
```

## 6.28 BLOCK COPY

Now press the ACTION function key to display the "Mark/Action Sub-menu". To complete the copy, you now need to position the cursor to the desired destination for the block. The FIND function key is duplicated on this menu to assist in finding the destination for long-distance moves. For practice, move the cursor down to line 180, and then press COPY. The block of code is duplicated above the line the cursor is on. The original block is still present in the first paragraph. If you really wanted the text copied to this new location, you would probably integrate it into the paragraph at this point by performing a JUSTPARA. Delete the copied block of text and restore the original paragraph using JUSTPARA before proceeding.

## 6.29 BLOCK MOVE

A block move is performed in the same manner as a block copy. The difference is that a MOVE deletes the original block during the operation and the COPY does not.

## 6.30 BLOCK SAVE

A marked block of text may be saved for later recall in one of eight special "save buffers", numbered from 1 to 8. This is useful, for example, when you have several frequently-needed paragraphs which you will use in several places or in several documents. You can generate the text of a paragraph once, and then SAVE it in one of the save buffers. Any time you need it in a document, you can recall the whole paragraph by number. The save buffers are located on disk, so that a block saved in one session can be recalled in a different document or a different editing session, even if the system has been turned off in the meantime. Each buffer is large enough to hold about 3000 characters. If the marked block is too large to save, an error message will be issued and the block will not be saved.

To try a block save to a buffer, first FIND line 144 in the sample file. Suppose that the sample paragraph titled "DRAWING WITH THE LIGHTPEN" at this location is what you wish to save. Mark the paragraph as you have previously learned and then press ACTION. Now press the SAVE function key, and complete the command on the command line by typing the buffer number desired, followed by RETURN, as shown below:

SAVE 1

The disk will "click", the normal function key legends will be restored and the highlighting will disappear. The block is now saved in buffer 1. Suppose you now wish to append this buffer at the end of the document. Use a FIND 9999 command to locate the end of the file; then press OTHER to access the alternate menu. Press the RECALL function key and complete the command by typing in 1 and RETURN:

RECALL 1

The saved block will be entered above the cursor. You may RECALL a saved block as often as desired. However, any time you SAVE a new block to the same buffer number, it will <u>replace</u> any text previously saved to that buffer number.

You may also SAVE marked blocks larger than 3000 characters to a separate file instead of a numbered save-buffer. This is often done when you wish to construct a new document based on pieces of other documents. You can mark the various pieces you need and collect them in a new file. To save a block to a file, mark the block desired and press ACTION and SAVE as before. Instead of typing a buffer number, however, complete the command by typing in a file name and pressing RETURN, for example:

SAVE MYNEWDOC

The file name must be given in all capital letters. This command will write the marked block out to the file called MYNEWDOC. If this file does not exist, it will be created automatically, and will appear in the INDEX display when you finish editing. If the file already exists, WORDPIC will ask:

FILE EXISTS. OVERWRITE IT, APPEND IT, OR CANCEL (O/A/C)?

Replying with C will cancel the SAVE operation. Pressing O will cause the present file contents to be discarded and replaced with the marked block. If A is pressed, the marked block will be appended to the end of the file, leaving the rest of the file intact.

## 6.31 MARKMORE FUNCTION KEY

The only function key on the Mark/Action submenu which has not been discussed is MARKMORE (f1). This key simply returns to the Mark submenu so that you can mark additional text before taking the desired action.

This completes the discussion of block operations initiated with the MARK function key. Only a few function keys remain to be described on the "alternate main menu".

## 6.32 UPDATE FUNCTION KEY

During the editing process, WORDPIC keeps the part of your document which is displayed in the text window or close to it in the computer's main memory. As you move the text window around in the file or make changes, WORDPIC automatically writes the updated text back to disk and reads other parts of your file into memory as needed. This reading and writing of the disk file is completely automatic, and will not interfere with your typing. WORDPIC uses an advanced technique called an "interrupt driven keyboard" so that you may continue to type in text even while the computer is reading or writing the disk or updating the screen, without losing any keystrokes. This feature is not usually found in small computer word processors.

Normally the part of your document most recently accessed or changed is kept in memory, and is not updated on disk until you press the QUIT function key. This is why you were warned earlier in this manual not to turn off the system without first pressing QUIT. If you did, the part of your document in memory would never get updated on disk.

The UPDATE function key updates the disk copy of your document to the current status of the part in memory, but does not exit from the EDITOR. It is a good idea during extensive editing sessions to periodically press UPDATE. This will minimize the likelihood of loss of information in your disk file in the event of a power failure or other problem. In particular, it is a good idea to press UPDATE if you are going to temporarily leave the computer during the editing session, for example, to answer the telephone.

## 6.33 NEWPAGE FUNCTION KEY

The NEWPAGE function key is used to generate a newpage code line. Pressing NEWPAGE will immediately generate a blank newpage code line above the current cursor location. The newpage code line is used to tell the PRINT module to advance to the top of the next page before continuing printing. Usually you will use the NEWPAGE function key to "force" the start of a new page, for example, at the end of a chapter or section in a document. All the commands you have learned for paragraph code lines may also be used on newpage code lines in the same manner. In addition, a number of additional commands and special capabilities are available for newpage code lines. The general issue of splitting a document up into pages of a predetermined size is handled by another program module within WORDPIC, which you will learn about in the next chapter.

# CHAPTER 7

## PAGINATING A DOCUMENT

### 7.1 THE PAGINATE MODULE

You have already learned how to enter and use the EDIT and PRINT modules of the WORDPIC system. In this chapter you will learn how to use the PAGINATE module to divide a document into pages prior to printing it. The general idea is that you tell the WORDPIC PAGINATE module how big you want your pages, and it will divide up your document automatically by inserting newpage code lines at the appropriate places. Unlike many other systems, however, WORDPIC displays every proposed "scissor point" in the document, which you may accept, reject, or move. This gives you, not the computer, final control over the printed output format. You may make "judgement calls" to eliminate splitting paragraphs across page boundaries or similar situations.

The PAGINATE module also supports many advanced features such as controlling automatic printing of "headers", "footers", automatic page numbering, etc. These special features will be covered in chapter 8.

### 7.2 STARTUP DIALOG

To start the PAGINATE module from the INDEX, first select the desired file and then press the PAGINATE function key (f5). For practice, you should select the SAMPLE1 file. You will be asked if you wish to make a backup file. Generally you will not want to make a backup file before paginating, but if you want to keep an unpaginated copy, you may do so. For this session, press the NO function key.

The next question is:

How many text lines per page do you want (excluding header/footer if any)?

Before answering this question, you will need to know what is meant by a "text line", "header" and "footer". The PAGINATE module measures the size of a printed page in "text lines", where one line is defined as 1/6 inch. Normally printers print 6 lines per inch, so one line is 1/6 inch high. For a standard 8-1/2 by 11 inch sheet of paper with a 1 inch top margin and 1/2 inch bottom margin, there are 57 lines per page. A header is one or more lines which appears at the top of every page, such as a title or section name, separate from the text. A footer is similar but appears at the bottom of every page, below the last line of text. Headers and footers are optional and are discussed in the next chapter. For now, assume your document does not need any headers or footers, and will use a normal paper size. Enter the number 57 and press RETURN.

The next question asked is:

Do you want to discard existing NEWPAGE code lines from the file?

This prompt is provided to give you a way to de-paginate a file which has been previously paginated. The sample file has not been previously paginated. Any new page code lines it contains were inserted at the end of a chapter during editing, and you want to retain these. Therefore answer the prompt by pressing the NO function key.

```
                WORDPIC Paginate 1.0   (C) Copyright 1983 M.T.U.
Line #   1 of SAMPLE1:0          Page #  0        @+=   0  ↧Line=  0 ( 57 under)
↧LINES= 57
¶ TYPE=ELITE OFFSET=0.9
▶   T    T
                          CHESTR USER'S MANUAL

                           TABLE OF CONTENTS

Introduction.....................................................4
    Equipment Requirements.......................................5
    Unpacking and Setup.........................................5

Creating an Image Using the CHESTR Program.....................6
    Startup Dialog..............................................6
    Drawing With the Lightpen...................................6
    Direction Conventions.......................................7
    Chemical Symbols............................................7
    Circles.....................................................8
    Correcting Errors...........................................8
    Crosshairs..................................................8
| ACCEPT |        | BACK PG. | TEMPLATE |  | SHOW VAR | SET VAR | REJECT | QUIT |
```

## 7.3 PAGINATE DISPLAY

This display is much like the EDITOR display, but with a different status line, title, and function keys. Also, there is no blinking cursor. Instead, an entire line at the top of the text window is highlighted. This line is the first proposed newpage code line. The proposed newpage code line indicates the "scissor point" where WORDPIC is proposing to start a new page. Initially, it will always appear before the first line of your document.

The proposed newpage code line contains the special newpage code in column 1, and has "LINES= 57" immediately after it. This indicates that currently WORDPIC will be trying to put 57 lines of text on each page. It is important to realize 57 text lines is not the same as 57 lines in your document file. Remember that code lines do not print, so that although they take up a line in the file, they do not count as a text line. There are other reasons why one line in the file might occupy less than or more than one text line. For example, you have learned that you can use subscripts or superscripts in a line. If you have a line that has a subscript without a balancing superscript, the file line will actually occupy about 1.5 text lines when printed. Also, in chapter 8 you will learn how to have double spaced text, graphic figures embedded with text, and other special features which will complicate the calculation of page size. The PAGINATE module takes all this into account automatically.

## 7.4 PAGINATE STATUS LINE

The status line reflects the current state of the proposed newpage code line. The leftmost part of the status line indicates the line number in the file where the currently proposed newpage code line will be inserted if it is accepted. The "Page=" display indicates the number of the page immediately above the proposed newpage code line. Since there is initially nothing above the proposed newpage line, the page number is 0.

The "@+=" shows the current value of the automatic page number, which will be discussed later. The " LINE=" shows the number of text lines (each 1/6 of an inch) between the last accepted newpage code line and the current proposed line. Since initially no newpage code lines have been accepted, the value is 0. The indicator, "( 57 under)", is an aid in manually positioning the proposed newpage line and will be explained shortly.

For the moment you need only be concerned with the ACCEPT, REJECT, and QUIT function keys. You may discover that the normal keyboard keys are disabled; they just "beep" when pressed. This is because you will only need to use the function keys and the UP and DOWN cursor keys to direct the pagination process.

## 7.5 ACCEPT AND REJECT FUNCTION KEYS

The ACCEPT function key tells PAGINATE to insert the proposed newpage code line into the file at the position shown, and advance to the next proposed position for a newpage code line. The REJECT key tells WORDPIC to discard the proposed newpage code line and advance to the next proposed page boundary. For the sample file, press the ACCEPT function key. The display will immediately change to:

```
                WORDPIC Paginate 1.0   (C) Copyright 1983 M.T.U.
Line #  37 of SAMPLE1:0          Page #  1        @+=   1  ↧Line= 32 ( 25 under)
------------------------------------------------------------------------------
    Generation of a Printable Image File.....................................10
    Startup Dialog...........................................................10
    Print Density............................................................11

Printing the Image Using WORDPIC.............................................13
¶


Appendix A.  CHESTER Database Format and Image File Format...................15
Appendix B.  CHESTR Image File Format.........................................16
Appendix C.  CHESTR Program Customizing.......................................17
¶


                                  ⌣INTRODUCTION⌣

    CHESTR (CHEmical STRucture Image Generator) is an interactive graphic
utility program for the MTU-130 computer which can rapidly create figures
| ACCEPT |          | BACK PG. | TEMPLATE |  | SHOW VAR | SET VAR | REJECT | QUIT |
```

Now the new proposed code line appears near the middle of the display, with 12 lines above the proposed newpage code line and 6 lines below it. This position is chosen so that you can see the last few lines of the page which will be ended by the newpage code line and the first few lines of the next page. In the case of the sample file, the newpage code line shown was one which was previously inserted in the file with the WORDPIC EDITOR, to force a new page after the end of the table of contents. Look at the righthand side of the status line and you will see that the page above the proposed scissor point contains 32 text lines. This is 25 lines under the desired 57 lines per page, as shown at the right end of the status line. Since you want to start a new page after the table of contents, press the ACCEPT function key.

The next proposed newpage code line computed by PAGINATE will then be shown:

```
                WORDPIC Paginate 1.0   (C) Copyright 1983 M.T.U.
Line #  74 of SAMPLE1:0          Page #  1        @+=  13  ↧Line= 57
-------------------------------------------------------------------------
generated by CHESTRPLOT can be freely intermixed with text and printed anywhere
desired in the document.

    Images may be printed on the NEC-8023 printer or Sanders Technology (SANTEC)
printer.  The NEC provides a high quality image at a very low cost, and the
SANTEC printer is capable of publication quality, such as that shown above.  The
highly interactive nature of CHESTR makes it easy to create chemical structure
images very rapidly.  The sample above was input in about five minutes.  This
manual describes steps 1 and 2 above in detail.  Detailed information on step 3
is given in the MTU WORDPIC Manual.

                              EQUIPMENT REQUIREMENTS
¶
    1). MTU-130 Computer with standard software.
¶
    2). MTU DATAMOVER (68000 & 256K RAM expansion) board.
¶
    3). Sanders Technology (SANTEC) S700 Printer with Graphics font ROMs, or,
        NEC 8023 Printer.
| ACCEPT |          | BACK PG. | TEMPLATE |  | SHOW VAR | SET VAR | REJECT | QUIT |
```

Notice that now the status line indicates there are 57 text lines above the new proposed scissor point. Press the UP key (up arrow) once and watch what happens. The scissor point moves back one line in the file. Actually, the proposed newpage code line stayed where it was and the text moved down. This is the way the display scrolls in the PAGINATE module, so you can always see the "context" of your document around the proposed scissor point. Notice that the status line now indicates there are only 56 text lines above the scissor point, and that you are "1 under". Now press DOWN twice. The proposed newpage code line moves forward by two lines, and the status line indicates that you are now "1 over" the desired 57 lines on this page. The "1 over" display is highlighted for emphasis, since this indicates a potential error situation where your text might overflow the physical end of the paper when printing.

Now press SHIFT/UP to show the previous 19 lines (and move the proposed newpage code line back by 19 lines in the file). Press UP eight more times. Note that you are now "25 under". Moveing the proposed newpage codeline across a paragraph code line didn't change the amount you were "under", because the code line won't print and therefore occupies no space. The line now above the proposed newpage code line is a figure code line. Press UP once more, and note that the status line shows you went from "25 under" to "48 under", even though you only moved one line! This is because the figure code line will print an image which is the equivalent of 23 text lines high. Moving the proposed newpage code line backwards across the figure code line moves the 23-line high figure to the next page. Figure code lines will be fully explained later.

Now use SHIFT/DOWN and DOWN repeatedly until you have returned the proposed new page code line to its original position, neither "over" nor "under". Do you really want to cut the page here? Probably not. If you do, you'll have the section title "EQUIPMENT REQUIREMENTS" on the last line of the page. It would

probably be better to move this section title to the top of the next page. Press UP once to cut the page a line earlier, and then ACCEPT the proposed newpage code line. This is how the WORDPIC PAGINATE module lets you make "judgement calls" on pagination which many other systems do not allow. When making adjustments, you will usually not want to go "over" the normal page size by more than a line or two, or you may be in danger of running over the end of the actual page when you print.

## 7.6 BACK PG. FUNCTION KEY

Using the same technique, finish paginating the sample document. If you decide after ACCEPTING a newpage code line that you really didn't want it at that position after all, you may backup to it by pressing the BACK PG. function key (f3). This function key discards the presently-proposed newpage code line, backs up to the previous newpage code line, and re-proposes it. The BACK PG. function may be repeated as often as necessary, all the way back to the start of the file.

## 7.7 EXITING FROM PAGINATE

When you reach the end of the document, or if you wish to exit from the PAGINATE module at any time, press the QUIT function key. You will be asked,

Do you want to ACCEPT the proposed line before quitting (Y/N)?

If you reply with a Y, the proposed newpage code line shown will be included in the file. If you reply with N, it will not. For the last proposed newpage code line at the end of the file, the resulting effect will be that if you include the final newpage code line, the printer will eject to top-of-form at the end of the document, but if you don't, it will just stop printing where it is. Press either Y or N, and the normal INDEX display will be restored.

The sample document is now paginated. You will learn how to do automatic page numbering, add headers and footers, and use the remaining PAGINATE function keys in the next chapter.

# CHAPTER 8

## ADVANCED FEATURES

At this point you have learned everything you need to know to produce, modify and print useful documents of any size using WORDPIC. This chapter describes some unique capabilities of the WORDPIC system which will help you get the most out of your machine. These capabilities include:

1). Automatic headers and footers.
2). Automatic page numbering.
3). Varying page size.
4). Automatic indentation and reverse indentation.
5). Varying line and paragraph spacing, and varying the number of lines per inch.
6). Proportional printing and varying the proportional pitch.
7). Separate gutterspace for odd and even pages.
8). Printing and displaying Greek, math and special symbols.
9). Generating complex equations.
10). Printing figures with text.
11). Editing documents with greater than 80 column lines.
12). Printing two column text.
13). Using macros for frequently-needed text or combining commands.

To start your tour of these advanced features, you will revisit the PAGINATE module.

### 8.1 HEADERS AND FOOTERS

A header is information which is to be printed at the top of every page, such as the title and/or chapter of a book. A footer is information which is to be printed at the bottom of every page. Page numbers may be included in the header or footer or both. With WORDPIC, it is not necessary to manually insert the headers or footers into your document file on each page. Instead, you only need to define your header or footer once, and it will automatically be printed on each new page. You may have any number of different headers or footers in the same document.

Headers and footers do not appear in your document file, but are instead stored in a separate file called a template file. You only need to create one copy of the header or footer you want in this template file. To get the header or footer printed in the final document, you simply "call it out" once in your main document, and it will be printed automatically on every page. Therefore you can later change the headers and footers on all the printed pages by merely changing the one copy in the template file and reprinting.

Creating a template file is easy. From the WORDPIC shell you generate a new file and edit it with the WORDPIC EDITOR. You may do this either before or after using PAGINATE. To create a header or footer, all you do is type the desired text in the horizontal positions you want it to appear, and terminate the header with a new page code line (by using the NEWPAGE function key). Usually your header or footer will only be one or two lines, but it can be any length. You may put up to 255 different headers or footers in the same template file, separated by newpage code lines.

For example, suppose you wish to create a header and a footer for the "CHESTR USER MANUAL" sample file you have previously paginated. To do this, use the NEWFILE function key to create a new file named CHESTR_TEMPS and enter your desired header and footer as shown below:

```
                WORDPIC Editor  1.0   (C) Copyright 1983 M.T.U.
File= CHESTR_TEMPS:0                                Col=  2  Line=    9  Top=    1
¶ TYPE=ELITE OFFSET=0.9
                                CHESTR USER MANUAL

                                      page @+

JUSTPARA | FIND | MARK | CHANGE |  TABSTOP | PRTRCODE | CENTER | OTHER
```

You have now defined a header and a footer. Make sure you included the newpage code line between the header and the footer. There is no inherent distinction between a header and a footer in the template file; either one could be used at the top or at the bottom of the page, depending on how they are "called out" in your main document.

You may be wondering about the "@+" in the footer. This is a special symbol called the page variable. When the WORDPIC PRINT module actually prints your hardcopy, it will automatically substitute the correct page number in place of the "@+" in the footer. When the footer for the first page is printed, "1" will be substituted for the "@+"; "2" will be substituted on the second page footer, etc. The page number will appear wherever you put the "@+", and may appear more than once if desired. If you don't want page numbering, simply omit the "@+" from the template.

Now that you have created the template file with your header and footer, you need to edit your main document to "call them out". Exit from the WORDPIC EDITOR back to the INDEX by pressing OTHER and QUIT.

You "call out" a header or footer by using a "HEAD=" or "FOOT=" command on a newpage code line. These commands may be added using either the EDITOR or PAGINATE. Normally it will be convenient to specifiy the headers and footers at the same time you paginate the file. Since you already know how to use the EDITOR to add commands to code lines, use PAGINATE this time. Press the PAGINATE function key and answer the questions. Do not discard the exisitng new page code lines.

The initial PAGINATE display will propose a newpage code line immediately before the newpage code line that is already there from the previous pagination exercise. REJECT this new proposed line. Then press the SET VAR function key (f6). A copy of the proposed newpage code line will be displayed on the command line at the very top of the screen (but not highlighted), followed by the blinking cursor. To call out your header and footer, type the commands on the line as shown below, then press RETURN.

```
↧LINES= 57 HEAD=1 FOOT=2 FILE=CHESTR_TEMPS
                WORDPIC Paginate 1.0   (C) Copyright 1983 M.T.U.
Line #   1 of SAMPLE1:0          Page #  0        @+=   0  ↧Line=  0 ( 57 under)
-------------------------------------------------------------------------------
↧LINES= 57
¶ TYPE=ELITE OFFSET=0.9
```

The commands you have added to the proposed new page code line specify that the header should be called out from page 1 of the template file, and the footer from page 2. The header and footer will be printed on every page until a different HEAD or FOOT command is used. HEAD=0 and FOOT=0 can be used to cancel printing of the header or footer completely. By default, headers and footers are called out from a file called TEMPLATES. You can specify a different file. In the above example, the headers and footers will be taken from the file named CHESTR_TEMPS instead.

## 8.2 SETTING THE PAGE NUMBER

In addition to calling out headers and footers, you may also set the value of the page number variable, "@+". For example, if you want the document to start with page 3 instead of page 1, you could specify:

↧ LINES=57 HEAD=1 FOOT=2 @+=3

You may have noticed that the value shown after the "@+" on the status line of the display changes as you accept newpage code lines. This is the current value of the page number variable. This value would be printed out in a header or footer on the page before the currently proposed newpage code line. It is important to realize that the values displayed on the status line are the values in force before the currently proposed newpage code line. This is because the newpage code line highlighted is only "proposed" and is not in effect. It also gives you a chance to view both the current value (on the status line) and any proposed changes on the newpage code line itself. All attributes specified by commands on the newpage code line apply to the page beginning with the code line, and do not take effect until the code line is accepted. Thus for the example code line immediately above, the first page would be numbered with 3, as you would expect.

## 8.3 VARIABLES

In addition to the page number variable, @+, there are 26 other user-defined variables called @A, @B, @C and so on up to @Z. These variable names may also be placed anywhere you like in headers or footers, but will be replaced with a value you specify when the document is printed. For example, suppose you wished to generate a header with a chapter number and a section name in it. In your template file you could define your header like this:

On the new page code line which "calls out" this header, you can specify the values which will be substituted for the variable names when the document is printed. For example, suppose you enter the newpage code line:

```
↓LINES=57 HEAD=1 FOOT=2 @C=1 @S="INTRODUCTION"
```

When the document is printed, the header will be printed as:

```
Chapter 1                    CHESTR USER MANUAL                    INTRODUCTION
```

All succeeding pages will have the same header, until you respecify the value of the @C or @S variables. Either upper or lower case names (@C or @c) may be used for variable names, and are equivalent. Values assigned to variables may be up to 31 characters long. If the value to be assigned to the variable includes blanks, it must be enclosed in quotes, either single or double. Otherwise, the first blank is assumed to be the end of the value. The @+ variable is a special case and may only be assigned a numeric value.

Since the number of characters substituted for a variable when it is printed may be shorter, equal to, or longer than the two character variable name, remaining text on the line may be shifted left or right when the substitution is made at print time. In some cases this is desirable, and in some cases it is not. For example, consider the following header:

```
@S                    page @+
```

The intention here is that the value assigned to @S will be the current section title, as was illustrated above. Suppose the first section is @S="Editing Text", and the next section is @S="Macros". When the document is printed, the page number on the header for the second section will be printed 6 characters further to the left than in the first section, because "Editing Text" is 6 characters longer than "Macros". To solve this problem, a backslash (\) should be typed immediately in front of "page @+" in the header. The backslash character is not printed, but serves as a placeholder. The affects of substitutions for @S will not propagate beyond the backslash.

## 8.4 DISPLAYING VARIABLE VALUES

While using the PAGINATE module, you may see what the current values of the user-defined variables are at any time by pressing the SHOW VAR (f5) function key. Remember that the values displayed are for the page <u>above</u> the currently proposed newpage code line. To restore the normal PAGINATE display, press the MAINMENU function key (f8).

## 8.5 DISPLAYING TEMPLATES

When you are using PAGINATE to call out headers and footers, you may forget which header or footer you want, or you may not remember the name of a variable in the header or footer. As a convenience, you may examine the template file without leaving the PAGINATE module by pressing the TEMPLATE function key (f5). You will then be asked:

Display what template file (RETURN=TEMPLATES )?

If you have previously specified a different template file name, that name will appear in the message above instead of TEMPLATES. If you want to see that file, just press RETURN. Otherwise, type in the name of the template file you want, and then press RETURN. The first header or footer in the template file will then be displayed. The NEXT PG function key can be used to advance the display to the next header or footer. Similarly the PRIOR PG function key can be used to back up to the prior header or footer. The FIND PG function key can be used to locate a specific header of footer by number. Pressing the MAINMENU function key will restore the normal PAGINATE display. If you wish to change the template file, you must exit the PAGINATE module and use the EDITOR, but you may examine the template file using the TEMPLATE function key.

## 8.6 DEFAULT CONDITIONS FOR HEADERS AND FOOTERS

You may have wondered what happens to your headers and footers, if, for example, you change type styles in the document that calls them out. Do the headers and footers printed change too, or do they stay the same? The answer is that the commands you specify in your main document have no effect on the headers and footers. If your document is printed in Elite, the headers and footers will still be printed using Pica type style, unless you specifically set the style to Elite in the header itself in the template file. Conversely, commands used in the template file have no effect on the main document. You may specify any commands you wish on paragraph code lines in the template file in the usual manner. It is even possible to print out a figure such as your company logo on a header or footer, by specifying a figure code line in the header or footer. Figures will be discussed shortly.

## 8.7 ODD AND EVEN PAGES

You may wish to prepare a printed master for a report, manual or similar document where pages will be published on both sides of the paper and bound at the edge, so that two pages are visible at once, as in an ordinary book. This situation, sometimes called "alternate-facing pages", presents two problems, both of which are easily solved with WORDPIC. First, you will want more offset ("gutterspace") on righthand pages than on lefthand pages, to allow extra margin where the pages are bound together. Second, you may wish to use different headers or footers on right-hand and left-hand pages. For example, some books print the title on right-facing pages and the chapter name on left-facing pages. The following three new commands will solve these problems:

ODDOFFSET ODDHEAD ODDFOOT

As you may have surmised, these commands specify the values to be used on odd numbered pages only. Assuming that you wish to start your report with a right hand page numbered 1 (and page 2 on the back of page 1), you might specify the following newpage code line at the start of your document:

↧ LINES=57 HEAD=1 FOOT=2 ODDHEAD=3 OFFSET=0.5 ODDOFFSET=1.5

This calls for different headers on odd and even numbered pages, but the same footer for both. Odd numbered pages (whose left edge will be at the binding) will have a lefthand margin of 1.5 inches, and even numbered pages (whose left edge will be at the exposed edge of the book) will have a half inch margin. Oddness and evenness are determined by the value of the @+ variable for that page.

Use the QUIT function key to exit from the PAGINATE module back to the INDEX display.

The next section defines more format control commands which you may use on paragraph or newpage code lines.

## 8.8 PAGELENGTH COMMAND

The PAGELENGTH command can be used to specify non-standard paper lengths. The default page length is 11 inches. The WORDPIC PRINT module uses the value of PAGELENGTH to determine how much paper to feed when a newpage code line is encountered. For example, if you use legal size paper, then you will want to specify PAGELENGTH=14. Values for PAGELENGTH may be specified from 0 to 25.5 inches, in 0.1 inch increments. The PAGELENGTH command only affects the printed output, not the display.

## 8.9 LINES COMMAND

As you have seen, the PAGINATE module automatically generates the command LINES=57 (or the value you specified) on the first newpage code line it generates. The PRINT module uses the value specified for LINES to determine where to position the footer. For example, if you have a page at the end of the chapter with only a few lines of text on it, the PRINT module will compute how many blank lines to print before printing the footer based on the current setting of LINES. The default value for LINES is 57. One LINE is always one sixth of an inch. The value of LINES is the measure of how much space is occupied by the main text of the page, excluding any header or footer.

## 8.10 SPACING COMMAND

The SPACING command is used to specify the amount of space between printed lines. The default value is SPACING=1, which is standard, single spaced spacing. For double spacing, use SPACING=2. Legal values for spacing are 0, 0.5, 1, 1.5, 2, and 3. Temporarily setting SPACING=0 can be used to overstrike lines for emphasis. Setting SPACING=0.5 is very useful for printing equations with many subscripts or superscripts, or for other special effects. The actual distance advanced by the printer after printing each line is determined by the value of SPACING <u>and</u> the value of LPI, described below. SPACING only affects the printed output, not the display.

## 8.11 PSPACING COMMAND

The PSPACING command is used to specify the number of additional lines which should be advanced after the end of each paragraph when printing. The default value is 0. Specifying PSPACING=1 will cause an extra blank line to be printed for any paragraph code lines which follow, including the one that contains the PSPACING command. PSPACING only affects the printed output, not the display. The actual amount of space advancned by the printer between paragraphs depends on the setting of SPACING, PSPACING, and LPI.

## 8.12 LPI COMMAND

The LPI command is used to specify the number of lines per inch which will be printed. The default value is 6 lines per inch. The other choice is LPI=8, which selects eight lines per inch. The LPI=8 command is useful for minimizing the space taken by a parenthetical block of text such as a long direct quote or extract from "the literature". Not all printers support LPI=8, in which case the command will be ignored. The value of LPI only affects the printed output, not the display. It has no effect on the LINES value, which is still measured in terms of 1/6 of an inch. It does affect the distance advanced by SPACING and PSPACING, however.

## 8.13 INDENT COMMAND

The INDENT command is used to automatically indent the first line of a paragraph. The default value is INDENT=0. If youp secify INDENT=5, then the first line of every paragraph will be indented 5 spaces when you press JUSTPARA. Legal values are 1 to 77, but must be at least 3 less than the value of RIGHT. If INDENT=0 is specified, then any indentation provided manually for the paragraph will be maintained when JUSTPARA is pressed. The INDENT command affects both the display and the printed results.

## 8.14 REVINDENT

The REVINDENT command is used to specify the amount of "reverse indentation" of a paragraph, also sometimes called "hanging indentation". The default value is REVINDENT=0. Specifying REVINDENT=5 means that every line of the paragraph <u>except</u> the first line will be indented by 5 spaces when the paragraph is justified with the JUSTPARA key. This is most useful for preparing outlines or similar documents. The value specified for REVINDENT is specified relative to the left margin. REVINDENT affects both the display and the printed results. The sample paragraph below was printed with REVIND=5.

**1. REVINDENT: This keyword is used primarily for preparing text using "hanging indentation", as is often used with lists of items accompanied by some descriptive text of each item. Plays and outlines also often need this type of format.**

## 8.15 PROPORTIONAL PRINTING CONSIDERATIONS

As you learned earlier, specifying TYPE=PROP selects the proportional printing type style, if your printer supports it. Unlike the other type styles, in which all characters are the same width on the line, the width of proportional characters varies with the "natural" width of the character. On the NEC 8023 dot matrix printer, character widths vary from 6 dots wide for "j" to 18 dots wide for "W" and "M", with most lowercase letters being about 12 dots wide and most uppercase letters 14 to 16 dots wide. Another trait of proportional mode is that the computer can control how much space is printed between characters. This ability is used when JUSTIFY=PROP is specified, to insert tiny extra spaces as needed between all the characters to fill out the line "flush right" to the margin. This process is essentially the same as is done by a typesetter, giving a very "finished" appearance to text. However, the same characteristics which make proportional printing attractive also present some potential problems for the user. The source of these problems is that it is difficult to predict the final placement of characters on the printed page. For example, consider the following chart:

| Type Style | DENSITY |
|---|---|
| PICA | 10 characters per inch |
| ELITE | 12 characters per inch |
| COMPRESSED | 17 characters per inch |
| PROPORTIONAL | variable number of characters per inch |

When the above text is printed using TYPE=PROP and JUSTIFY=OFF, the results look like this:

| | |
|---|---|
| **PICA** | **10 characters per inch** |
| **ELITE** | **12 characters per inch** |
| **COMPRESSED** | **17 characters per inch** |
| **PROPORTIONAL** | **variable number of characters per inch** |

What happened? Why doesn't the right-hand column line up the way it did on the display or when printed in another type style? The answer is that it doesn't line up because the characters in each line of the first column are not all the same width. There are 23 characters in each line prior to the second column, but on the first line, most of them are blanks which are narrow, and on the last line, most of them are capital letters averaging about 15 dots wide. Therefore the second column on the last line is "pushed over" farther to the right by the text to its left. Lines having the same number of characters will line up at the left and right ends, but the characters in between will "fall where they may".

The best solution to this problem is simply not to use proportional print for tabular material. If you have a document which is mostly text with some tabular material, you may want to print the text part using TYPE=PROP and the tables using TYPE=ELITE. The difference in the typestyles will not be noticeable except to the most discerning eye.

Another problem area is centering titles. When you press the CENTER function key in the WORDPIC EDITOR, the computer centers the line by moving the text until there are the same number of blanks on the lefthand and righthand sides of the text, if possible. But when this text is printed using the proportional type style, it will suffer from a similar malady as the tabular entries above. The amount of "white space" to the right of the title all depends on the width of the characters in the text, and may or may not be equal to the space on the left.

If your titles are long or contain all or a lot of uppercase letters, you can expect that the title will probably be printed too far to the right. Perhaps the best way to handle this problem is to insert additional spaces between ords in the title. This will provide some additional room to absorb the width of capital letters.

## 8.16 PROPPITCH COMMAND

A final possible problem occurrs infrequently, but could mystify you if you are not prepared for it. This problem is noticeable only when using JUSTIFY=PROP to achieve flush-right justification in conjunction with TYPE=PROP. If you print a line which is almost all capital letters, it may run over the righthand margin when printed, even though it ends within the margin on the display. When using proportional justification, the PRINT module computes the location of the righthand margin on the assumption that there will be 12 characters per inch, which is the default average "pitch" for proportional printing. For proportional justification it then inserts additional "microspaces" between characters as needed to bring the end of the text flush with the right margin. However, it is possible that a given line of text will contain so many wide capital letters that the printer cannot print 12 characters per inch even with no space between characters. Since you wouldn't want the characters to overlap each other, the only other choice is to print them with no spacing between characters and let the end-of-line fall where it will. This is what the WORDPIC PRINT module does.

There are several possible solutions to this problem. First, you should try to avoid using an overabundance of capital letters in proportionally justified text. Alternatively, if you know that you will be using a lot of wide letters, you can alter the "pitch" the print module will use from the default value of 12 characters per inch, by using the PROPPITCH command. For example,

¶ PROPPITCH=11.3

changes the average spacing to 11.3 characters per inch. Legal values are 0 to 25.5 characters per inch in 0.1 inch increments. Specifying a lower value will spread the characters out, making the text column wider. Choosing a higher value for PROPPITCH will compress the characters closer together. The default value of 12 was chosen to give the same density as the ELITE type style, so that mixing ELITE and PROP styles will be acceptable.

## 8.17 SPECIAL CHARACTERS

Most printers provide a character set which includes at least the 96 printable characters of the ASCII character set given in Appendix 7.1 of the WORPDIC Reference Manual. Many printers provide additional characters as well, such as Greek characters, math symbols, or special graphic characters. Unfortunately there is no standard for these characters, and each printer manufacturer has implemented characters different from the other manufacturers. To make matters worse, even if two printers both provide a certain character, the "code" used to signal the printer to print that character will probably be different. The computer tells the printer which character to print by specifying a two digit code, usually specified in hexadecimal. On one printer, the symbol for Pi might be printed with a code of AC hexadecimal, but on another it might be selected with 9B, for example.

Given these constraints, the WORDPIC system provides a simple method which allows you to use the special characters your printer can print. Section 5.10.2 of the WORDPIC Reference Manual provides a table of every character your printer can print, and gives a two digit hexadecimal code for each. To enter one of the special characters, first look up the two digit code for the desired character. Then using the WORDPIC EDITOR, position the cursor where you want the special character, and press the PF1 key located at the upper left hand corner of the numeric keypad. Then enter the two digit code for the desired character, and it will appear immediately on the screen. Nothing will appear on the screen until both digits of the code are completed. If you hear a beep, you have entered an illegal character. You must enter two hexadecimal digits, and if the digits contain letters, they must be UPPER CASE.

For example, the NEC 8023 printer uses the code C6 for the greek letter theta. To enter theta, press the PF1 key, then C and then 6. A Greek theta will appear on the screen, and will be printed by the NEC printer. A partial WORDPIC EDITOR display is shown below with several special characters entered.

```
¶ TYPE=ELITE OFFSET=0.9

        X = πr²-Σ(i·Δx³+2γ)
```

## 8.18 PRINTING MATHEMATICAL FORMULAS

The WORDPIC word processor provides several aids for the construction of mathematical formulas. You have already seen how to generate subscripts and superscripts easily by using the PRTRCODE function key. For more complex formulas involving large brackets or parentheses, additional techniques are needed. Perhaps the easiest way of printing a complex formula is to "draw" it on the screen using a graphical editor such as GREDIT, and then save the image and print it as a figure. Printing figures will be discussed later in this chapter. A different method will be discussed now for "fabricating" the special symbols you need from the graphical symbols provided by your printer. Although these techniques require some imagination and experimentation to achieve the desired result, the ability of the WORDPIC system to display graphical symbols on the display screen greatly simplifies the process compared to other word processors.

For equations with many subscripts, superscripts, and brackets, the best approach is often to use SPACING=0.5 to specify halfline spacing, and then create your subscripts and superscripts on a separate line without using any embedded codes. This is best illustrated with an example. The equation below was printed on the NEC 8023 dot matrix printer:

$$k = \frac{r_2}{r_1} = \left[ \frac{(x+d)^2 + y^2}{(x-d)^2 + y^2} \right]^{\frac{1}{2}}$$

The corresponding appearance of this equation in the WORDPIC EDITOR display is shown below:

```
                WORDPIC Editor  1.0   (C) Copyright 1983 M.T.U.
File= WP_FORMULA_1:1                                Col=  1  Line=   13  Top=    1
x------------------------------------------------------------------------------x
¶ SPACING=0.5   TYPE=elite offset=0.9

                                        1
                  ⌈                    ⌉-
             r    |        2     2    |2
              2   | (x+d)   + y       |
        k = -- =  | ------------      |
             r    |        2     2    |
              1   | (x-d)   + y       |
                  ⌊                    ⌋

█
¶

 JUSTPARA | FIND | MARK | CHANGE |  TABSTOP | PRTRCODE | CENTER | OTHER
```

In this example, the large brackets are fabricated by using the special vertical line characters and angle characters provided by the NEC 8023 printer. For example, The top of a left bracket is a code of 98 hex, the vertical bar is made of several code 96 characters, and the bottom is a code 9A. These values can be found in the WORDPIC Reference Manual.

Sometimes a special symbol you need can be fabricated by overstriking two or more of the symbols that are provided by your printer. For example, if you need a square box (called a "hollow dingbat" by typesetters), it can be fabricated by using four line codes overprinted in the same character position. You may remember that ESC followed by BACKSPACE generates an embedded backspace code, shown on the WORDPIC EDITOR display as a backward-pointing arrow. The codes required for making the box appear on the WORDPIC EDITOR display as:

```
|←_←¯←| Check this box if you wish to attend the User's Group meeting
```

and would print as:

```
□ Check this box if you wish to attend the User's Group meeting
```

CHAPTER 9

## FIGURES

A truly unique feature of the WORDPIC system is its ability to print figures mixed with text, provided you have a printer which has a graphics mode. With WORDPIC you can print graphic images of various sizes and shapes, mixed with text. You can print graphics beside text, print two or more graphic images side-by- side or overlapped, print text over a graphic image, etc.

A sample figure is printed below for purposes of illustration. This figure was printed on the NEC 8023 printer using a density of 120 horizontal by 144 vertical dots per inch, with an image size of 720 dots wide by 501 dots high. This image is provided on the WORDPIC distribution disk.

Cholesterol ($C_{27}H_{45}OH$)

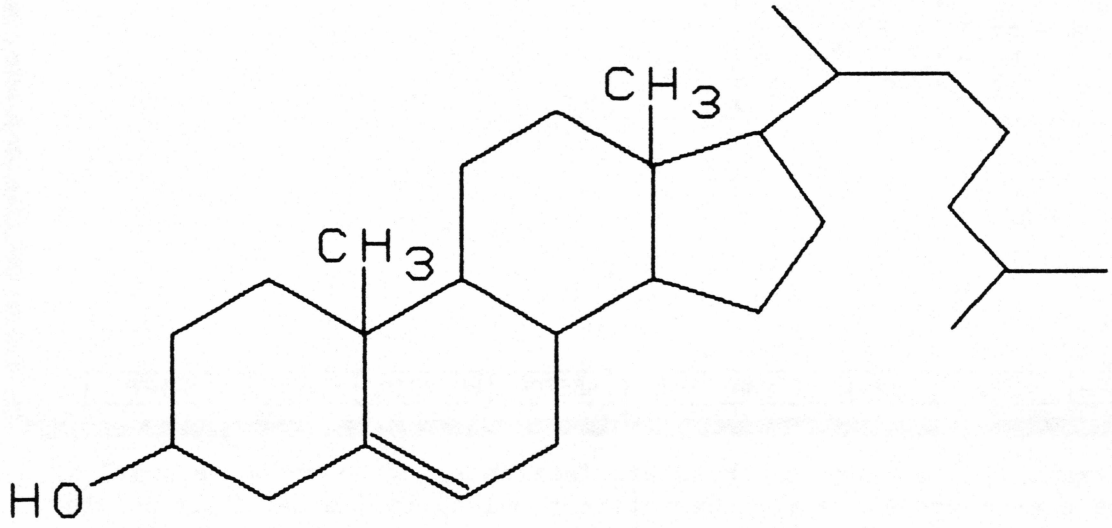


The sample screen displays in this manual were printed using the low resolution mode of the NEC 8023 printer (72 by 80 dots per inch). The standard MTU-130 screen displays a 480 by 256 image, which is the size printed for the samples.

## 9.1 GRAPHIC FILES

You may have noticed a file called SAMPLE1_IMG.G in the INDEX display of the distribution disk. If you try to EDIT this file, WORDPIC will display an error message saying:

Can't edit a Graphics file. Please select a file without ".G", then press EDIT.

This is because WORDPIC uses graphic files in a special format to print images, and these graphic files are designated by having ".G" appended to the name. The ".G" is sometimes called the "file extension". Instead of containing text, graphic files contain a very large array of dots stored with one dot per bit of disk space. When a graphic file is printed, the print module merely copies the dots from the disk onto the paper. There is a short "header" on the disk file which tells the PRINT module how large the image should be, and optionally may tell it how dense the image should be. The density of the image is a measure of how close together the dots should be printed.

## 9.2 FIGURE CODE LINES

To print a figure, you call out a graphic file, in much the same manner as you called out a header or footer. A special figure code line is used to call out a graphic file. This figure code line is generated from the WORDPIC EDITOR by pressing the OTHER key on the main menu and then pressing the FIGURE function key. You may then enter commands on the figure code line to specify what graphic image you wish to print and how you wish to print it. For example:

```
◘ FILE=SAMPLE1_IMG.G OFFSET=0.8
```

will print the figure stored in the file called SAMPLE1_IMG.G, 0.8 inches from the left edge of the paper. Several commands are provided exclusively for use on figure code lines, which will now be described.

## 9.3 FILE COMMAND

The FILE command is used to specify what graphic image file will be printed. If no FILE command is given on the figure code line, then no image will be printed, but the printer will leave a blank space on the paper equivalent to the default figure size, which is 256 dots high. When specifying a file, you must specify the complete file name, including the ".G". Only one FILE command should be specified on a single figure code line, but you may include as many figure code lines as you need in your document file. Note that images are not displayed on the WORDPIC EDITOR when they are called out; figure code lines are displayed as ordinary text so that you can move or change them as needed. A separate utility program is available for previewing images on the MTU-130 display prior to printing, and will be described shortly.

## 9.4 REM COMMAND

Since you can't see the image while you are editing text, it is sometimes useful to be able to "tag" your figure code line with a reminder of what the figure is. The REM command is used to insert a "remark" in the figure code line, for example:

```
◘ FILE=FIGURE1.G REM="BAR CHART OF '83 SALES"
```

The remark must be enclosed by quotes. The prin module will simply ignore the remark. You may also use the REM command on paragraph and newpage code lines if you wish.

## 9.5 HEIGHT COMMAND

Figure sizes are measured in dots, also called pixels. The actual printed size of the image in inches depends on the heigth and width of the figure in dots, and the density in dots per inch. Normally the graphic image file itself provides the necessary information about the dimensions of the figure and the desired density. You may, however, specify the dimensions or density on the figure code line. The HEIGHT command is used to specify the desired height of the figure, measured in dots. For example:

```
◘ FILE=MYPIC.G HEIGHT=120
```

specifies a figure which will be 120 dots high. If you specify a HEIGHT which is less than the actual height of the figure stored in the image file, then only the top part of the image will be printed, and the excess bottom part will be ignored. If you specify a HEIGHT which is greater than the actual height of the image, then the PRINT program will add additional blank space at the bottom of the figure to reach the specified height. Figures up to 2047 dots high may be printed. If no HEIGHT command is given, the height specified in the graphic file header is used. If no graphic header is found in the image file, then a default of 256 dots is used.

## 9.6 WIDTH COMMAND

The WIDTH command can be used to specify the width of a graphics image in dots, for example:

```
◘ FILE=MYPIC.G HEIGHT=120 WIDTH=96
```

specifies a width of 96 dots for the figure. If you specify a WIDTH less than the actual width of the figure, only the lefthand portion will be printed and the excess ignored. If you specify a WIDTH greater than the actual width, the excess is left blank. Figures up to 2047 dots wide may be printed. If no WIDTH command is specified, the width given in the graphic file header will be used. If no graphic file header is present in the image file, a default of 480 dots is used.

CAUTION: Not all files with a .G extension actually have a "graphics header" specifying the width and height of the file. If you try to print an image file which does not have a header, and you specify a WIDTH which is different from the actual width of the image, the printed image may wind up looking like "garbage". You can determine if a ".G" file has a graphic header or not, and determine the dimensions and density of the image if it does, by using a special utility program described shortly.

## 9.7 DENSITY COMMAND

Printers which can print dot-image graphic files can usually print the image in several densities. The density of an image is expressed in dots per inch. The higher the density, the greater the "resolution" of the image will be. The density is usually different in the horizontal and vertical directions. The horizontal and vertical densities are both specified by a single DENSITY command on the figure code line. The value specified for DENSITY must be a two-digit numeric code where the first digit specifies the horizontal density and the second digit specifies the vertical density, according to the table below:

FIGURE DENSITIES IN DOTS/IN

| Code digit | 1 | 2 | 3 | 4 | 5 | 6 | 7 | 8 | 9 | 0 |
|---|---|---|---|---|---|---|---|---|---|---|
| 1st, horiz. | 60 | 72 | 80 | 96 | 120 | 144 | 160 | 192 | 240 | Special |
| 2nd, vert. | 48 | 72 | 80 | 96 | 108 | 144 | 192 | 216 | 288 | Special |

For example,

```
⊡ FILE=MYPIC.G DENSITY=23
```

specifies a horizontal density of 72 dots per inch and a vertical density of 80 dots per inch. Any given printer can only print a small subset of the 100 possible combinations of horizontal and vertical density. Refer to Chapter 5 of the WORDPIC Reference Manual for the capabilities of your particular printer. If a density is not specified on the figure code line, it is read from the graphic file header. If the image file does not have a header, a default value of 22 (72 x 72 dots/inch) is used. Formulas are provided in the WORDPIC Reference Manual to compute image sizes from the density, height and width of a figure.

## 9.8 WHERE DO FIGURES COME FROM?

You may well have wondered how you generate a figure file in the first place. Figure files may be created in several ways by other programs on the MTU-130.

Perhaps the easiest way to create a graphic image file is to use the GREDIT Graphic Editor program, which is included on the WORDPIC Distribution disk. With GREDIT you can "draw" a neat figure on the MTU-130's display screen and save it in a graphic file. GREDIT is easy to use and is described in the WORDPIC Reference Manual and in the Demonstrations section of the MTU-130 User's Manual. A similar program, called ANNOTATE, allows titling of graphic images with letters of varying size and line thickness. ANNOTATE is also described in the WORDPIC Reference Manual.

Special purpose programs may also be used to generate image files. For example, the second sample image showing the cholesterol molecule was generated using an MTU application program call "CHESTR", which can be used to rapidly sketch a chemcical structure on the screen using the standard MTU-130 light pen. The computer then generates a neat figure image in a size selected by the operator, which can be printed using WORDPIC. The CHESTR program is available from MTU.

Other programs may be easily written in MTU BASIC to generate graphic images. Both the CHESTR program and the GREDIT program were written in MTU BASIC. Unlike many other computers, MTU's BASIC provides full support for graphic commands built in. A full description of the graphics capabilities for MTU BASIC is given in the IGL (Integer Graphic Library) and VGL (Virtual Graphics Library) section of the MTU-130 User Manual.

MTU BASIC provides a method to save anything drawn on the screen by using a command from the standard CIL (CODOS Interface Library). Once an image has been drawn on the MTU-130 screen from BASIC, it can be saved in a file by the BASIC command:

```
SYSTEM "GSAVE IMGFILE.G"
```

where IMGFILE.G is the desired file name.

## 9.9 GSAVE UTILITY PROGRAM

The GSAVE command can be used directly from CODOS as well as from BASIC/CIL. GSAVE is actually a small utility program, included on the WORDPIC distribution disk. GSAVE allows you to save anything on the screen as an image file, ready to be printed by WORDPIC. In addition, you can specify that only a portion of the screen be saved in the image file. You can interactively "crop" the image visually to any size desired before saving it.

To use the GSAVE utility, first exit from WORDPIC by pressing the OTHER function key and then the QUIT function key. The prompt, "CODOS>" at the left margin indicates you are now using the CODOS operating system of the MTU-130, as described in the MTU-130 User Manual. After obtaining the desired image on the screen by some method (such as using GGET, described below), you may crop the image by typing:

```
GSAVE FILENAME.G GC
```

where FILENAME.G is the file name you wish to use for the image. A pulsating cross, the full width and height of the screen, will appear. This crosshair is called the GRIN (GRaphic INput) cursor. It can be maneuvered on the screen by using the four cursor arrow keys. If you hold down SHIFT while pressing an arrow key, the cursor moves faster. The intersection of the cross indicates the current point of interest in the image. Following the prompting message, position the GRIN cursor to the desired upper left hand corner of the image section to be saved and press carriage return keyboard. Then move the GRIN cursor to the lower right hand corner and press return. The file will be save on disk, and control returned to CODOS.

An obvious problem with this method is that the commands you type may overwrite part of the image you wish to save or even cause the screen to scroll. You can solve this problem. Before getting your image onto the screen, home the cursor by pressing HOME. Then press CTRL/E. This will keep the computer from showing what you type on the screen until you press CTRL/E again. The cursor will still be moved along the screen so you can see where you are. Naturally you will have to be careful to type accurately. Now type:

```
ASSIGN 2 N
```

This will keep the computer from displaying CODOS> on the screen until you type "ASSIGN 2 C" or until you make an error. You may now execute the GSAVE command as described above, without overwriting any of the screen with text. Note that prompts from GSAVE will still show but the screen will be restored before the image is written. To restore normal text activities on the screen, type CTRL/E again and give the CODOS command:

```
ASSIGN 2 C
```

If you type "GSAVE FILENAME.G" without "GC", the entire screen will be saved to FILENAME.G. Other variations of the GSAVE command are available to save an image of known dimensions. These variations are described in the WORDPIC Reference Manual.

## 9.10 GGET UTILITY PROGRAM

The GGET Utility program is also executed from CODOS (or from BASIC using the SYSTEM command). It retrieves a graphic file from disk and shows it on the display. An image larger than the 480 by 256 dot display may be accessed, in which case only the visible portion of the file will be displayed (the upper left hand corner by default). To display a graphic image file on the screen, type,

```
GGET FILENAME.G
```

where FILENAME.G is the desired graphic image file name. If you do not want the CODOS prompt to appear on the screen after the image is displayed, you can suppress it as described for GSAVE above. To display a different part of an image which is larger than the screen display, you may add an optional horizontal and vertical offset to the command. For example:

```
GGET BIGPIC.G -100 -60
```

will display the file BIGPIC.G starting with the 100th horizontal dot at the left hand margin and the 60th vertical dot down from the top of the image at the top of the screen. Both the horizontal and vertical offsets may be specified as positive, to locate the edge of the image in from the edge of the display, if desired. Any area of the screen that does not receive part of an image is left undisturbed, so that it is possible to combine images. After combining images you could save the new composite image using the GSAVE Utility program.

## 9.11 GETDIM UTILITY PROGRAM

You may have wondered how you find out what the size of an image is once it has been saved to a graphic file. This function is provided by the GETDIM utility program, which also may be executed from CODOS, or from BASIC using the SYSTEM command. For example:

```
GETDIM BIGPIC.G
```

will display the dimensions of BIGPIC.G, for example:

```
BIGPIC.G          Type=$00  Width=1024 Height=534  H-Density=120 V-Density=144
```

The "Type" of $00 inidcates that this is a standard dot-image graphics file. Other types may be defined in the future. The width and height are expressed in dots. The vertical and horizontal density are expressed in dots per inch. This information is extracted form the header on the image file. The format of this header is described in the WORDPIC Reference Manual Appendix.

## 9.12 GCONVERT UTILITY PROGRAM

If you use the GETDIM Utility on a file which does not have a graphics header, GETDIM will display:

*** ERROR *** Not a Graphic file...

This does not necessarily mean the file does not contain graphic information. It merely means that the graphic header is not present. For example, if an image on the screen was put into a file using an ordinary CODOS SAVE command (described in the MTU-130 Users Manual), it will not have a graphic header, but will still contain graphic information.

The GCONVERT utility program can install a graphic header on this type of file so that it can be used with GGET and GETDIM. To use it, type:

GCONVERT FILENAME.G

where FILENAME.G is the desired filename. The file will then be converted "in place". If GCONVERT discovers that the file you specify is truly not a graphic file (memory image), it will give an error message. More information on GCONVERT is given in the WORDPIC Reference Manual.

CHAPTER 10

# MORE ADVANCED FEATURES

## 10.1 WIDE MODE DOCUMENTS

When you begin a new file using WORDPIC, you are asked if you want a normal or wide document as part of the startup dialog. Until now, you have always selected normal width, which can be used for documents up to 80 columns wide. Occasionally you may wish to create a wider document. If you select WIDE mode for your new document, you will be able to generate up to 160 columns of text on each line.

The standard WORDPIC display can only display 80 characters of text per line. For wide documents, the normal 20-line by 80 character text window is replaced with a different arrangement, known as "landscape mode". In landscape mode, two display lines are used to display one line of the file. Therefore 10 lines of the file are displayed at once instead of 20. If a given line contains less than 80 characters, it will still occupy two full display lines, with the second display line being blank. When the document is printed, lines will be printed full width, up to 160 characters or the maximum width your printer can print. A typical landscape mode display is shown below:

```
                WORDPIC Editor  1.0   (C) Copyright 1983 M.T.U.
File= WIDE_DOC1:0                                  Col= 97  Line=   10  Top=    1
x----+----+----x----------------------------------------------------------------+
¶  TYPE=COND offset=0.9 right=98

▶   T    T                                T                                    T
      T
Despite its sophistication, WORDPIC is one of the easiest word processors to use
. The MTU-130's
green phosphor CRT monitor displays 80 sharp characters by 24 lines of text, and
 can edit lines up
to 160 columns wide.  Upper and lower case characters with descenders plus a ful
l set of special
characters including Greek and math symbols ( π, Σ, Δ, ω, etc.) are displayed on
 the CRT just as
they will be printed on the hardcopy.  An interrupt-driven keyboard assures no l
ost keystrokes no
matter how fast you type.  Full screen editing is used with "infinite scrolling"
 which allows you
to view and edit any part of a file of up to 1,000,000 characters.  Cursor contr
ol keys which
repeat when held down make positioning on the screen a snap, and the INSERT and
DELETE keys make█
|JUSTPARA|  FIND  |  MARK  |CHANGE|  |TABSTOP|PRTRCODE|CENTER|OTHER|
```

Notice that the tic marks which show the tabstop positions on the horizontal line below the status line now appear both on the top and the bottom of the line. The tic marks on the top of the line correspond to tabstops set in columns 1-80, and tic marks on the bottom show tabs in columns 81-160. Similarly, the right hand margin is shown by an upside-down "V" if it is in columns 81-160.

Also notice that a word which is split between the first and second "half" of a landscape mode line is not "wrapped", because the word is not truly at the end of the line, but only at the end of the display. If you delete or insert characters on the first "half" of a landscape mode line, the text on the second half of the line will also move, since it is part of the line.

As you would expect, the shifted UP and DOWN keys only advance the display by 10 lines in the file instead of 20. Other WIDE mode operations are equivalent to normal mode. If you wish to use headers and footers for a wide document, your TEMPLATES file must also be wide. You should not attempt to RECALL wide mode documents into normal text, or otherwise mix wide and normal documents.

Occasionally you may wish to convert an exisitng normal-width document to wide mode, or visa-versa. This can be done by using the FILE ATT fucntion key from the WORDPIC INDEX, followed by the CHG WDTH function key, and then answering the questions. Note however than changing from WIDE to NORMAL mode will truncate lines in the file that are wider than 80 characters.

## 10.2 TWO COLUMN TEXT

Many newsletters and similar documents use two columns of text per page. Without WORDPIC, this is normally done by printing long "galleys" of text which are cut and "pasted up" into columns manually. Using WORDPIC, you can generate your text as a single long column and let WORDPIC do the "cut and paste" electronically before you print. The printer will actually print first one column, and then backup and print the second column (assuming your printer is capable of reverse line feeds). This same basic technique can be used to print text beside graphics images or text over graphic images.

## 10.3 BACKPAGE COMMAND

The key to printing multicolumn text is the BACKPAGE command, which can be specified on a newpage code line. For example:

```
↓BACKPAGE=1
```

tells the printer to start a new page, but instead of advancing to top-of-form in the usual forward direction, it should backup to the top of the same page it just finished printing. Any text following this will simply print over the top of whatever was on the page already.

Since you don't want the second column on top of the first, you will need another command to start the second column on the right hand side of the page. You already know what this command is -- the OFFSET command. Suppose you wish to print two columns of 40 characters each, with the left column starting one half inch from the left edge of the paper and the righthand column 4 inches from the left edge. Start the lefthand column with a new page code line:

```
↓OFFSET=0.5 RIGHT=40
```

When you reach the end of the first column, start the righthand column with:

```
↓BACKPAGE=1 OFFSET=4.0
```

This pattern can be repeated for each printed page. However, none of this tells you where to "cut" your long column. This can be done using the PAGINATE module. Suppose that you visualize each column as a "page" for purposes of pagination. Then all left-hand columns could be considered "odd" numbered pages and all right-hand columns "even" pages. When you enter PAGINATE, change the first new page code line to:

```
↓ LINES=57 OFFSET=4.0 ODDOFFSET=0.5
```

Now as you split the long column of text up every 57 text lines, odd "pages" will print with an OFFSET of 0.5 inches and even "pages" with an offset of 4.0 inches. All that remains is to trick the printer into printing one odd and one even "page" on each physical sheet of paper. This can be done by using the SET VAR function key to add "BACKPAGE=1" to the new page code line after every odd numbered page. Your document will be printed in the final two-column format automatically. If you want to number pages, you won't be able to use the @+ variable though, because you are using that to count "columns". Use another variable instead and change it on the new page code line which ends each even numbered "page".

## 10.4 BACKUP COMMAND

The BACKUP command can be specified on paragraph code lines to back up a specified number of text lines. For example:

¶ BACKUP=10 OFFSET=4.0

tells the printer to backup 10 lines and to change the offset to 4.0 inches. This could be used after printing an image to print text beside the image. More information on BACKUP is provided in the WORDPIC Reference Manual.

## 10.5 MACROS

As you become familiar with WORDPIC and use it more and more, you may find certain sequences of characters or commands that you use over and over. WORDPIC provides a kind of "shorthand" whereby the advanced user can enter up to 31 characters by pressing only two keys. This facility is called a WORDPIC macro. To use a macro, you first tell WORDPIC what keystrokes you want. The group of keystrokes is saved by WORDPIC associated with a number from 1 to 8, much like the SAVE function key used with a numbered buffer. Once the macro is defined, the keystrokes can be entered by merely pressing ENTER (on the numeric keypad), followed by the number from 1 to 8. This is called invoking the macro.

For example, suppose you wish to define the phrase "WORDPIC word procssor" as macro number one. From the WORDPIC EDITOR, press the OTHER function key and then the MACRO function key. The word "MACRO" will appear on the command line at the top of the display. Then complete the command by typing the desired macro number, followed by the desired text, enclosed in quotes, followed by RETURN:

MACRO 1 "WORDPIC word processor"

From now on, anytime you press ENTER followed by 1, the phrase "WORDPIC word processor" will appear just as though you typed it in. It can be entered not only in the text window, but as part of a command as well. You can use a macro, for example, to define a frequently-needed FIND command.

You may also use macros to define frequently-needed sequences of editing keystrokes. To embed a special editing key such as a cursor movement key in the "text" of a macro, you can preceed the special key with ESC. ESC tells WORDPIC to enter the next key pressed literally into the text, rather than interpreting it as a control function. For example, if you wish to define a macro which inserts three spaces beginning in column 2 of the next line, you could press the following sequence of keys:

OTHER MACRO 1 " ESC DOWN ESC SHIFT/LEFT

ESC RIGHT ESC RIGHT ESC INSERT SPACE SPACE

SPACE " RETURN

Subsequently pressing ENTER 1 will cause WORDPIC to advance the cursor to column 2 of the following line and insert three blanks. The only key which cannot be embedded in the text of the macro is RETURN. However, ESC DOWN followed by ESC SHIFT/LEFT can be used for the equivalent function.

A macro may also invoke another macro or even invoke itself. For example, if you add ESC ENTER 1 at the end of the text of the macro definition above, the macro will repeat over and over, inserting three blanks at column two on every line of the file! If a macro invokes iteslf, it will loop forever until one of the following conditions occurs:

1. End-of-file is encountered during a DOWN operation.
2. Beginning-of-file is encountered during an UP operation.
3. An error condition occurs.
4. The BREAK key is pressed.

The BREAK key (located at the upper right of the main keyboard) can be used to halt a "runaway" macro or stop it at some desired point. Macro definitions are stored on disk, so they can be defined in one session and used in another, even if the computer is turned off in the meantime.

# CHAPTER 11

## FILE MAINTENANCE OPERATIONS

In Chapter 2 you learned how to backup the WORDPIC distribution disk. This chapter describes how to perform other necessary "utility" operations for word processing, such as changing disks, copying, deleting and renaming files, formatting a new disk, and determining the attributes of a file. All these operations may be performed using the WORDPIC system.

### 11.1 SELECTING A DISK DRIVE

When using WORDPIC on a normal two-drive MTU-130, the WORDPIC system disk is present in drive 0. Additional files may be used on drive 1. Only document files on one drive or the other are accessible at any one time. Normally, drive 0 is selected. To access files on drive 1 instead, press the OTHER function key from the WORDPIC INDEX display. Then press the SEL DSK1 function key (f1). The system displays the message:

Please place the desired disk in drive 1. Press RETURN when ready.

Put the desired disk in drive 1, if you have not already done so. This must be a formatted disk. If you want to use a brand new work disk which has not been formatted, you will have to format the disk first using the NEW DISK command, described below. When you have put your disk in drive 1 and closed the door, press RETURN. The INDEX display will immediately show the document files present on drive 1. Any operations you perform on files will be on drive 1. However, you should not remove the disk from drive 0 because WORDPIC will load certain system files it needs internally from drive 0 (such as the EDITOR, PAGINATE and PRINT modules).

Once disk drive 1 is selected, the function key legend which was SEL DSK1 will change to SEL DSKO. The SEL DSKO function key can be used to re-select disk drive 0. You may change disks in disk drive 1 any time drive 1 is <u>not</u> selected. To change disks in drive 0, you should use the CHG DSKO function key instead.

### 11.2 CHANGING DISKS IN DRIVE 0

The CHG DSKO function key is used to change disks in disk drive 0. You should not change disks in drive 0 at any other time, even if disk drive 1 is selected, because the WORDPIC system needs certain system files from drive 0 for its normal operations. When you do change disks in drive 0, the new disk you install must be formatted and must contain a copy of the WORDPIC system software. You can obtain a disk meeting these requirements by using the BACKUP function key as was described in Chapter 2, or preferably, by using the NEW DISK function key described later.

To change disks in drive 0 from the WORDPIC INDEX display, press the OTHER function key and then CHG DSKO. Remove the old disk from drive 0, put the new disk into drive 0, and press RETURN. This completes the operation.

## 11.3 FORMATTING A NEW DISK

Before you can use a newly purchased blank disk for WORDPIC operations, it must have certain system information written on it, which organizes the way information is stored on the disk. This operation is known as formatting the disk. Formatting can also be done to a disk you have been using, to irrevocably erase everything on the disk. If your system has only one disk drive, it will be rather tedious to format a new disk. In this case, pre-formmatted WORDPIC disks may purchased from MTU.

There are two ways to format a disk. The first way is to use the BACKUP command which you learned about in chapter 2. This formats a disk and at the same time copies all the information from disk drive 0 to the new disk in drive 1.

Usually when you start work on a new disk, you won't want to copy over all the files from the disk in drive 0. Instead, you may just want a "clean slate" to work with, or perhaps only want to copy one or two documents to the new disk. The NEW DISK function key is provided for this purpose. It formats the new disk, but does not copy over any document files. To format a disk, press the OTHER function key from the WORDPIC INDEX and then the NEW DISK function key. WORDPIC displays:

CAUTION! NEW DISK will irrevocably erase everything on the disk in drive 1!
Please place the disk to be erased in drive 1, then press RETURN to continue.

If you wish to change your mind, press the CANCEL function key. Otherwise, put the disk to be formatted into drive 1 and close the door, first making sure that the disk is not write protected (see chapter 2 if you don't remember how to do this). Then press RETURN. The next message is:

Please enter a volume number (4 digits max.) for the disk, then press RETURN.

The purpose of the volume number is to provide a unique number written on each disk so that future versions of the WORDPIC system may be able to identify a disk by number. Currently this volume number is written on the disk but is not used by the system. You may enter any number you wish, without commas, up to four digits. Then press RETURN. The next question is:

Do you wish to check the disk for defects (takes 8 minutes)?

Disks are subject to damage from dust, scratches and other contaminants. The WORDPIC system is set up so that if part of a disk becomes unusable, the rest of the disk may still be used. The test for defects checks all the areas of the disk and if any defective areas are found, it will mark them as unusable in a special log the system keeps. If you are using a new disk made by a reputable manufacturer, you shouldn't need to test the disk for defects. If you have reason to suspect the disk may be defective, then you should test it. Reply Y or N. If you reply Y, the system will show continuous disk activity for about eight minutes, and will report any defects found on the display.

The next prompting message is:

Do you plan to use this disk in drive 0 (takes 16% of space needed for prog's)?

Normally you will reply Y to this question. If you reply N, then the WORDPIC software will not be copied to the new disk, and you will not be able to use the disk in drive 0. You might want to reply N if you expect to have a very large number of files and need all the disk space you can muster, and don't mind only using the disk in drive 1. Reply Y or N. The next question is:

Do you plan to have large files (containing 25+ printed pages) on this disk?

WORDPIC can format the disk so that it is either optimized for rapid retrieval of long documents or short documents. This question is used to decide which format will be used. If you reply N, you may still have large documents on the disk; it will just take WORDPIC slightly longer to read them. If in doubt, reply Y. The final prompting message is:

CAUTION: Everything on the disk in drive 1 will now be erased.
Are you sure you want to do this (erasing will begin if answer is "YES")?

Reply Y to format the disk or N to abort the operation. If you reply Y, the formatting operation will take about 1 minute (8 minutes if you elected to check for defects). The normal INDEX display will then be shown. If you wish you may then copy any document files you want over to the new disk, or select the new disk to create a new file.

## 11.4 COPYING A FILE

The COPY function key is used to copy an individual file. It can be copied to the same disk or to a different disk. From the WORDPIC INDEX, first select the file you wish to copy and then press the COPY (f6) function key. Both document files and graphic files may be copied. WORDPIC will ask:

What disk do you want to copy FILENAME to?

where FILENAME is the name of the file you selected. Press either the DISK 0 or DISK 1 function keys. If the disk is not the same as the selected disk, WORDPIC asks:

Do you wish to use the same name (FILENAME) for the copy?

Reply Y unless you want to change the file name at the same time. If you picked the same disk that the file is already on, you <u>must</u> specify a different name, so WORDPIC displays:

Please enter a new file name for the copy of FILENAME, then press RETURN.

Enter a legal file name of up to 12 characters and press RETURN. If you are copying to a different disk, you will be prompted to insert the destination disk into the drive if you have not already done so. Pressing RETURN starts the copy operation, which normally will only take a few seconds except for very large files. When the copying operation is complete, the normal INDEX display is restored.

## 11.5 DELETING A FILE

To permanently delete a file from a disk, first select the file and then press the OTHER function key, followed by the DELETE function key (f3). WORDPIC will ask:

Are you sure you wish to delete FILENAME?

where FILENAME is the file you selected. If you change your mind, press NO or CANCEL. Otherwise press the YES function key (or enter Y), and the file will be deleted. There is no way to recover a deleted file. It will only take a fraction of a second to delete the file. The normal INDEX display will then be restored, showing a blank spot where the deleted file was in the index.

## 11.6 BACKING UP AN ENTIRE DISK

On any computer system, you should always maintain backup copies of all your important files. The BACKUP function key provides a convenient way of rapidly backing up an entire disk using WORDPIC. The procedure for backing up a working disk is the same as for backing up the WORDPIC distribution disk, as described in chapter 2.

## 11.7 RENAMING A FILE

You already know one way to change the name of a file, by copying it with a name change and then deleting the original. A simpler method is to press the FILE ATT key from the INDEX display and then press the RENAME function key. This function key lets you change the file name without making a copy. You will be asked for the new file name. After you type it in and press RETURN, WORDPIC will display both the old and new name and ask you if you are sure this is the change you want. Press the YES function key and the file will be renamed in less than a second and the INDEX will be redisplayed, showing the new name.

## 11.8 FILE ATTRIBUTES

You may have noticed that there are several other choices besides RENAME on the function key menu after pressing FILE ATT. These function keys are used to determine attributes of the selected file, or to change the attributes. These other keys are explained fully in the WORDPIC Reference Manual. The purpose of each of these function keys is summarized briefly below:

| | |
|---|---|
| DATE? | Display the original creation date of the selected file. |
| SIZE? | Display the percent of disk space occupied by the selected file. |
| LN WDTH? | Display whether the file is a normal (80 column) or wide document. |
| CHG DATE | Change the date associated with a file. |
| CHG WDTH | Change from normal (80) width to wide (160) or visa-versa. |
| RENAME | Change the selected file name as described above. |
| MAINMENU | Restore normal INDEX display without further action. |

# CHAPTER 12

## BEYOND THIS MANUAL

You have now learned how to use the WORDPIC word processor to create, edit and print a wide variety of documents quickly and easily. As you continue to use WORDPIC, you may have specific questions about a particular facet of the system. The WORDPIC Reference Manual contains detailed information beyond the scope of this manual and includes an index to both manuals for your convenience.

### 12.1 COMMUNICATING WITH OTHER SOFTWARE AND COMPUTERS

You may wish to use WORDPIC to prepare text files for use with other programs on the MTU-130 computer, or to edit files generated by other programs. This is very feasable. Unlike many other systems, the files used by WORDPIC are standard ASCII text files, with lines terminated by a CR (carriage return). These files may be read or written by other programs on the MTU-130. The standard MTU-130 program EDITOR, included as standard equipment with every MTU-130, can read and write files compatible with WORDPIC too. The special characters used in the first column of code lines and for embedded code characters by WORDPIC may not be displayable by other software on the MTU-130, but can be read using standard sequential file techniques supported by all MTU-130 languages including BASIC, FORTH, C, and Assembler.

You may also wish to transfer documents to or from other systems. This can be done by using a disk as the medium of exchange, or by transmitting the document over phone lines using a modem. If you wish to send a document on disk to another system, the MTU DISKEX Utility Program will allow you to convert files from WORDPIC format to the format used by CPM or IBM systems. Since most other systems are not capable of supporting the special characters or graphic images used by WORDPIC, you would be well advised to limit your documents to ordinary text, with blank lines marking paragraph ends, and no headers or footers if you anticipate using the documents on another system.

The standard MTU AUTOTERM utility program provides an extremely convenient and flexible method of transferring documents to or from other systems over the telephone network using a DC Hayes Smartmodem (available from MTU). You may even tell AUTOTERM to dial up a remote facility at off-peak hours an transfer a file, completely unatteneded! AUTOTERM is very easy to use and is equivalent or superior to other telecommunication packages costing $50-$200 or more, and is free with every MTU-130. See the MTU-130 User Manual Utilities section for a complete description of AUTOTERM.

# GLOSSARY

ASCII - Acronym for American Standard Code for Information Interchange (pronounced "ass-key"). A standard method of assigning numeric codes to represent printable and control characters.

ATTRIBUTE - A characteristic such as type style, line spacing, etc. which affects the way text is printed.

BACKTRACK - The ability to recall prior commands given to the WORDPIC system in reverse order, starting with the most-recently issued command.

BACKUP - (1) To make a duplicate copy of a document or disk for archival purposes. (2) To move the paper in the reverse direction in the printer.

BLOCK - One or more contiguous lines of text to be manipulated as a single entity.

BYTE - A measure of computer memory or disk space. One byte can hold one character.

CASE INSENSITIVE - Considering uppercase and lowercase letters which are otherwise the same to be equivalent.

CHARACTER STRING - A group of 1 or more contiguous characters treated as a single entity.

CODE CHARACTER - A non-printing character which triggers a special printing function, such as underlining or superscripting.

CODE LINE - A non-printing line of text in a document used to specify how the following text is to be printed. Code Lines are indicated by one of four special symbols appearing in column 1 of the line.

CODOS - The computer operating system for the MTU-130 computer, which manages the storage of documents on disk and provides a method of interactive control over the computer hardware facilities.

COMMAND - (1) An instruction of the form KEYWORD=VALUE appearing on a code line in the WORDPIC system, used to set attributes. (2) An instruction entered by the user on the top line of the Command/status area to perform a certain function, for example to FIND the occurrence of a certain word in the document.

COMMAND/STATUS AREA - The top three lines of the WORDPIC screen display, where commands appear and some characteristics are displayed.

CONDENSED - A type style characterized by closely spaced characters, usually 17 characters per inch.

CONTIGUOUS - Occuring one-after-the-other without interruption.

CRT - Cathode Ray Tube. The MTU-130 display screen or monitor.

CURSOR - A small blinking rectangle appearing on the screen to indicate where the next character typed will appear.

CURSOR CROSS - A group of five keys to the right of the keyboard, used to move the cursor on the screen in four directions or "home" it to the upper left hand corner of the screen.

DAISY WHEEL PRINTER - A printer with a printing element where each character is on the end of a spoke of a wheel (like petals on a daisy). Commonly used for letter-quality office printing at moderate speeds (16-50 characters/second).

DEFAULT - The assumed value or choice if no other value or choice is explicitly specified.

DENSITY - A measure of how closely spaced dots are in a dot-matrix figure, usually expressed in dots per inch.

DIALOG - The conversation between WORDPIC and the human operator.

DISK - A thin flexible circular sheet capable of storing hundreds of thousands of characters of information magnetically on its surface, enclosed in a square, flexible plastic jacket.

DISK DRIVE - The piece of hardware holding the motor, electronics and read-write heads to transfer information to a floppy disk. The floppy disk is inserted into the disk drive, which transfers information from the recording surface to and from the computer.

DISKETTE - See disk.

DISTRIBUTION DISK - The floppy disk prerecorded at the MTU factory with the WORDPIC SYSTEM software.

DOT MATRIX PRINTER - A printer which has a printing element consisting of several stiff wires, used to form characters by making multiple dots in close proximity. Often a character is formed with an array of 5 by 7 or 7 by 9 dots.

DRIVE - See disk drive.

ELITE - The smaller of the two most popular typewriter print styles, the larger being "pica". The elite type style prints 12 characters per inch, or 12 pitch.

EMBEDDED CODE - See code character.

FORMAT - (1) (noun) The arrangement or layout of text on the printed page. (2)(verb) To completely erase a disk and make it usable by the computer for storage of new information.

FILE - A collection of related information stored as a unit on disk, retrievable by name.

FLOPPY DISK - See disk.

FLUSH JUSTIFICATION - Text which has the ends of all lines vertically aligned.

FOOTER - One or more lines repeated at the bottom of each page, such as a page number and/or chapter or section title.

FUNCTION KEY - One of eight keys, "f1" through "f8", located above the main MTU-130 keyboard, used to select what action is to be performed.

FUNCTION KEY LEGEND - One of eight titles appearing in rectangles at the bottom of the screen, indicating what action will be performed by the corresponding function key.

GALLEY - A proof printout of type in columnar form, often used for checking purposes.

GRAPHICS - The pictures or diagrams that accompany the text.

GUTTERSPACE - The space between the bound edge of the paper and the text.

HARDWARE - The physical equipment of the computer system, including the keyboard, memory, CRT screen, central processing unit, disk drives, etc.

HEADER - One or more lines of text repeated at the top of every page, such as a page number, chapter or section title.

HEXADECIMAL - A number system using base 16, commonly used in computer applications, where the digits include 0,1,2,3,4,5,6,7,8,9,A,B,C,D,E, and F, where A through F correspond to 10 through 15 in decimal notation.

HIGHLIGHTED - Shown in reverse video (dark letters on a light background).

INDEX - An alphabetized display of file names on the screen. The INDEX display is the starting point for all operations in WORDPIC.

INTERRUPT-DRIVEN KEYBOARD - A special computer technique which allows keystrokes to be saved in memory even while the computer is busy with another task such as reading the disk, so that no keystrokes will be lost.

INVOKE - To use a previously-defined macro by pressing the ENTER key followed by thenumber of the desired macro.

JUSTIFICATION - The arrangement of text between the left and right margins.

K - A numeric computer constant having the value 1024. Thus 2K=2048, 4K=4096, etc.

LANDSCAPE MODE - The method of operation where lines up to 160 characters long can be displayed on the screen by splitting each line into two halves of 80 columns each, displayed one below the other.

MACRO - A kind of shorthand by which the user can enter up to 31 characters of text of his choice by only pressing the ENTER key followed by a number from 1 to 8.

MARGINS - The left and right column limits for the text.

MARKING - Designating one or more lines of text to be manipulated as a block. Marked lines are highlighted in reverse video for ease of identification.

MEMORY - The high speed electronic storage array of the computer, housed in the computer module of the MTU-130.

MENU - A list of choices displayed on the screen. In the WORDPIC system, the term menu is used to refer to the currently displayed function key legends.

MODULE - A computer program used to perform a specific task, such as editing, paginating, printing, etc.

PAGELENGTH - The physical length of a sheet of paper measured in inches.

PAGINATION - The act of dividing a continuous file into pages prior to printing.

PICA - The larger of the two standard typewriter type styles, the other being elite. The pica type style prints 10 characters per inch, also known as 10 pitch.

PITCH - The measure of the number of characters printed per inch. 10 pitch means 10 characters per inch.

PIXEL - A single "picture element", or one dot.

PROPORTIONAL - A printing style in which different characters occupy a different amount of space.

RAGGED JUSTIFICATION - Printing text "as is", with lines not aligned vertically at the right margin.

RESOLUTION - A measure of how closely spaced dots are in a figure. High resolution means closely spaced dots, for a more accurate rendition of the image.

REVERSE INDENTATION - "Hanging" indentation where the first line of a paragraph starts at the left margin but subsequent lines are indented by a fixed amount.

REVERSE VIDEO - Displaying information in the opposite of the normal colors of the CRT screen, that is, with dark characters on a bright background. Used for highlighting, emphasis, and designating a marked block.

SAVE BUFFER - An area of memory and/or disk designated to hold text.

SCROLL - To move text vertically on the screen so that one line disappears off the top or bottom while a new line appears at the opposite end.

SOFTWARE - The computer programs used to instruct the computer to perform a particular application, such as word processing.

STRING - See character string.

TEMPLATE - A sample header or footer used to illustrate the desired layout of the information.

TEXT WINDOW - The portion of the screen used to enter, display, and modify the document text.

UTILITY - A special purpose program used to perform some "housekeeping" chore, such as file copying, disk formatting, etc.

VALUE - The selected choice for a command of the form KEYWORD=VALUE on a command line. A value can be a number within certain limits, a name, or a predefined word.

VARIABLE - A single letter preceeded by "@" in a header or footer, which is replaced with a specified text string during printing.

VETO - The operator's opportunity to accept or forbid an action proposed by the WORDPIC system, such as replacing a particular instance of a specified string.

VOLUME NUMBER - A four digit number which is magnetically recorded on a disk when it is formatted.

WHITESPACE - An area of the page which does not contain any printing.

WORDPIC SYSTEM - The collective name given to the software and hardware used to perform word processing on the MTU-130 computer. WORDPIC is a trademark of Micro Technology Unlimited.

WORD WRAP - The act of moving a word from the end of one line to the beginning of the next in order to avoid having to hyphenate it.